ATTENTION

PLEASE NOTE: BIDDERS DOWNLOADING CONTRACT DOCUMENTS MUST REGISTER USING THE FORM PROVIDED IN ORDER TO BE CONSIDERED AN OFFICIAL PLAN HOLDER AND BE ELIGIBLE TO RECEIVE ANY ADDENDA.

IF YOU HAVE NOT ALREADY DONE SO, PLEASE FOLLOW THE LINK BELOW AND FILL OUT AND SUBMIT FORM TO BE CONSIDERED AN OFFICIAL PLAN HOLDER.

http://www.dedham-ma.gov/index.cfm?cdid=27542&pid=13534

THIS PAGE IS NOT A PART OF THE CONTRACT DOCUMENTS

Copy No._____

TOWN OF DEDHAM, MASSACHUSETTS
CONTRACT DOCUMENTS
FOR

FY2016 ASPHALT PAVING AND RESURFACING

March 2015

Town of Dedham
Department of Public Works &
Department of Infrastructure Engineering

James Kern, Town Manager
Joseph M. Flanagan, Director of Public Works
Jason L. Mammone, P.E., Director of Engineering

TABLE OF CONTENTS

	Section Number
Bidding And Contract Requirements	
Invitation To Bid	00020
Instructions To Bidders	00100
Bid Form	00300
Agreement	00500
Construction Performance Bond	00610
Construction Payment Bond	00620
Certificates of Insurance	00650
General Conditions	00700
Supplemental General Conditions	00800
Excerpts from Applicable State Law	00850
Special Requirements	01015
Measurement and Payment	01025

Attachments

Attachment A - Wage Rates and Certificate of Compliance

Attachment B - (MBE/EEO/AA) Policies

1. Commonwealth of Massachusetts

Attachment C – Monthly Price Adjustments

1. Document 00811 – Hot Mix Asphalt Mixtures
2. Document 00812 – Diesel Fuel and Gasoline
3. Document 00814 – Portland Cement Concrete Mixes

Attachment D - Town of Dedham Design and Construction Standards

Attachment E - Massachusetts Highway Department Wheel Chair Ramp Standards

SECTION 00020

INVITATION FOR BIDS

Sealed bids for furnishing the following item(s) will be received at the Office of the Town Manager located at 26 Bryant Street, Dedham, MA 02026 until the time specified below at which time the proposals will be publicly opened and read:

	ITEM	BID OPENING
Bid:	**FY2016 ASPHALT PAVING AND RESURFACING**	**April 9, 2015**

Specifications and bid forms may be obtained at the Engineering Department Office located at the Department of Public Works facility, 55 River Street, Dedham, MA, after March 13, 2015 between 7:00 A.M. and 3:00 P.M., upon payment of a nonrefundable fee of $50.00 payable to the Town of Dedham. Cash is not acceptable. Checks shall be made payable to the Town of Dedham. Bidders may also obtain a PDF version of the specifications from the Town of Dedham's website www.dedham-ma.gov at no charge.

Contractors must be prequalified with MassDOT in accordance with 720 CMR 5.00, "Prequalification of Contractors". Contractors seeking "information only" bid documents are not required to be prequalified.

This Contract contains price adjustments for Portland and bituminous concrete mixtures, diesel fuel, and gasoline. The base price for Portland cement is $123.78 per ton, for liquid asphalt is $580.00 per ton, for diesel fuel $2.162 per gallon, for gasoline is $1.727 per gallon.

Bids will be opened in the Lower Conference Room at Town Hall, 26 Bryant Street, Dedham, MA, at 10:00 AM. Each Bid must be accompanied by a bid security consisting of a BID BOND, CASH, or, CERTIFIED CHECK issued by a responsible bank or trust company in the amount of 5% of the bid price.

Pre-Bid Conference will be held in the Lower Conference Room at Town Hall, 26 Bryant Street, Dedham, MA on March 26, 2015 at 10:00 AM. It is strongly encouraged that all prospective bidders have a representative in attendance.

A performance bond in an amount equal to 100 percent of the total amount of the bid with a surety company qualified to do business in the Commonwealth of Massachusetts will be required for the faithful performance of the contract as well as a labor and materials bond in an amount equal to 100 percent of the total bid amount.

All bids for this project are subject to applicable public bidding laws of Massachusetts, including **G.L. c.30, §39M** as amended.

The term of this contract shall extend from July 1, 2015 through June 30, 2016. The Town, at its sole discretion with consent of the contractor, shall have the option to extend the contract for one (1) additional year period, July 1, 2016 through June 30, 2017, with no changes in the contract

price or terms and conditions and at its sole discretion with consent of the contractor, the option to extend the contract for one (1) additional year period, July 1, 2017 through June 30, 2018. The contractor is cautioned that there is no guarantee of consistent workload volume throughout the optional contract extension periods. The contractor must also maintain MassDOT qualification for each following option year in accordance with 720 CMR 5.00 to be eligible for the optional contract extension.

Attention is directed to the minimum wage rates to be paid as determined by the Commissioner of Labor and Industries under the provisions of Massachusetts General Laws, Chapter 149, Section 26 to 27D inclusive.

Selection of the contractor will be based upon bidder qualifications, including evidence of past performance in similar projects, and bid price. The contract will be awarded to the bidder deemed by the awarding authority to be the lowest responsible and eligible bidder.

Please be advised that funding for this project has not yet been obtained; therefore, any contract awarded pursuant to this invitation for Bids shall be subject to and contingent upon appropriation of sufficient funds by Town Meeting.

The Town of Dedham is an affirmative action/equal opportunity owner/purchaser.

The bidder agrees that its bid shall be good and may not be withdrawn for a period of 30 days, Saturdays, Sundays and legal holidays excluded, after the opening of the bids.

The Town reserves the right to waive any informalities, to accept or reject, in whole or in part any or all bids, or take whatever other action may be deemed to be in the best interest of the Town.

The Town of Dedham

By James Kern

Its Town Manager

SECTION 00100

INSTRUCTIONS TO BIDDERS

1. Receipt and Opening of Bids

The Town of Dedham, Massachusetts, herein called the Owner, acting by and through its Town Manager, will receive sealed Bids for FY2016 ASPHALT PAVING AND RESURFACING.

Such bids addressed to the Town Manager, 26 Bryant Street, Dedham, MA 02026, and endorsed Bid for FY2016 ASPHALT PAVING AND RESURFACING will be received at the Office of the Town Manager until 10:00 AM prevailing time, on April 9, 2015 at which time and place said bids will be publicly opened and read aloud.

Any bid may be withdrawn prior to the above scheduled time for the opening of bids or authorized postponement thereof. Any bid received after the time and date specified will not be considered. The bidder agrees that this bid shall be good and may not be withdrawn for a period of 30 days, Saturdays, Sundays, and legal holidays excluded, after the opening of bids.

2. Location and Work to be Done

The Work consists of various forms of asphalt paving and resurfacing including but not limited to full depth reclamation, grading and compaction, cold planing, paving, installation of bituminous and granite curbing, installation and repair of bituminous and concrete sidewalks, installation or replacement of drainage pipes and structures, and other miscellaneous related work.

The location, general characteristics, and principal details of the Work are shown on the Town of Dedham's approved FY2016-FY2018 Pavement Management Plan, available at www.dedham-ma.gov. The exact location and work to be done are shown for information only and are subject to modifications, deletions, and additions as deemed necessary by the Owner.

Additional drawings showing details in accordance with which the Work is to be done may be furnished by addendum from time to time during the bidding period by the Owner or its Engineer, and shall then become a part of the Contract Documents.

The Contractor shall furnish all labor, services, materials, equipment, plant, machinery, apparatus, appliances, tools, supplies, and all other things necessary to do all work required for the completion of each item of the Work and as herein specified.

The Work to be done and paid for under any item shall not be limited to the exact extent mentioned or described but shall include all incidental work necessary or customarily done for the completion of that item.

3. Preparation of Bid

Each bid must be submitted on the prescribed form. All blank spaces for bid prices must be filled in, in ink or typewritten, in both words and figures.

Each bid must be submitted in a sealed envelope bearing on the outside the name of the bidder, his address, and endorsed with the name of the project as specified in Receipt and Opening of Bids, above.

If forwarded by mail, the sealed envelope containing the bid must be enclosed in another envelope addressed as specified in Receipt and Opening of Bids, above.

4. Bid Opening Procedure

The following list of requirements shall apply to each filed bid. Bids not meeting all the requirements for timeliness and security will be rejected without opening; bids not meeting signature and addenda requirements will be rejected prior to checking of bid amounts.

Bids shall be filed at the place and before the time specified in Receipt and Opening of Bids, above.

Properly executed bid security shall be placed in a sealed envelope and shall be attached to the outside of the envelope containing the bid.

Bid signatures will be checked.

All addenda, including a mechanism to confirm receipt, shall be issued by the Town by any means deemed suitable to the Town to all bidders no later than five days prior to the date established for the submission of bids. All bidders shall include with their bids the written acknowledgement form provided in Section 00300, FORM OF GENERAL BID. Failure of any bidder to receive any such addendum or interpretation shall not relieve such bidder from any obligation under his bid as submitted.

The total dollar amount of each bid will be read, and the three apparent lowest bids will be selected for further consideration. These three apparent low bids will be read aloud for the benefit of the other bidders and the bid opening procedure will be closed. All those present at the bid opening may examine all bids after the bid opening and after the reading of the three apparent low bids.

5. Telegraphic Modification

Any bidder may modify his bid by telegraphic communication at any time prior to the scheduled closing time for receipt of bids, provided such telegraphic communication is received by the Owner prior to the closing time, and, provided further, the Owner is

satisfied that a written confirmation of the telegraphic modification over the signature of the bidder was mailed prior to the closing time.

The telegraphic communication shall not reveal the bid price but shall provide the addition or subtraction or other modification so that the final prices or terms will not be known by the Owner until the sealed bid is opened. If written confirmation is not received within two days from the closing time, no consideration will be given to the telegraphic communication.

6. Ability and Experience of Bidder

No award will be made to any bidder who cannot satisfy the Owner that he has sufficient ability and experience in this class of work and sufficient capital and plant to enable him to prosecute and complete the work successfully within the time named. The Owner's decision or judgment on these matters will be final, conclusive, and binding.

The Owner may make such investigations as he deems necessary, and the bidder shall furnish to the Owner, under oath if so required, all such information and data for this purpose as the Owner may request.

7. Conditions of Work

Each bidder must familiarize himself fully with the conditions relating to the construction of the project and the employment of labor thereon. Failure to do so will not relieve a successful bidder of his obligation to furnish all material and labor necessary to carry out the provisions of his contract. Insofar as possible the Contractor, in carrying out his work, must employ such methods or means as will not cause any interruption of or interference with the work of any other Contractor.

8. Addenda and Interpretations

No interpretation of the meaning of the plans, specifications or other prebid documents will be made to any bidder orally. All information given to bidders other than by means of the plans, specifications, or by addenda, as described below, is given informally and shall not be used as the basis of a claim against the Owner.

Every request for such interpretation should be in writing addressed to the Director of Engineering, 55 River Street, Dedham, MA 02026, and to be given consideration must be received at least seven days prior to the date fixed for the opening of bids. Any and all such interpretations and any supplemental instructions will be in the form of a written addenda to the specifications and issued as described above in Part 4, “Bid Opening Procedure”. Failure of any bidder to receive any such addendum or interpretation shall not relieve such bidder from any obligation under his bid as submitted. All addenda so issued shall become part of the Contract Documents.

9. Security for Faithful Performance

Simultaneously with his delivery of the executed Contract, the Contractor shall furnish a surety bond or bonds as security for faithful performance of this contract and for the payment of all persons performing labor and materials under this contract as specified in Section 00700, GENERAL CONDITIONS included herein. The surety on such bond or bonds shall be a surety company qualified to do business under the laws of the Commonwealth and satisfactory to the Owner. The bonds shall remain in force for one year after final acceptance of the work by the Owner, unless the Owner, in writing, releases the Contractor from the obligation sooner.

10. Power of Attorney

Attorneys-in-fact who sign Contract bonds must file with each bond a certified and effectively dated copy of their power of attorney.

11. Laws and Regulations

The bidder's attention is directed to the fact that all applicable State laws, municipal ordinances, and the rules and regulations of all authorities having jurisdiction over construction of the project shall apply to the contract throughout, and they will be deemed to be included in the Contract the same as though herein written out in full. Attention is directed to Section 00850 and to other applicable sections of this specification.

12. Liquidated Damages for Failure to Enter into Contract

The successful bidder, upon his failure or refusal to execute and deliver the Contract and bonds required within 10 days after he/she has received notice of the acceptance of his/her bid, shall forfeit to the Owner, as liquidated damages for such failure or refusal, a portion of security deposited with his/her bid, but the amount forfeited shall not exceed the difference between his/her bid price and the bid price of the next lowest responsible and eligible bidder. In case of death, disability, bonafide clerical or mechanical error of a substantial nature, or other similar unforeseen circumstances affecting the bidder, his/her bid deposit will be returned.

13. Obligation of Bidder

At the time of the opening of bids each bidder will be presumed to have inspected the site and to have read and to be thoroughly familiar with the Contract Documents (including all addenda). The failure or omission of any bidder to examine any form, instrument, or document shall in no way relieve any bidder from any obligation in respect of his bid.

14. Information Not Guaranteed

All information given in the Contract Documents relating to subsurface and other conditions, natural phenomena, existing pipes, and other structures is from the best sources at present available to the Owner. All such information is furnished only for the information and convenience of bidders and is not guaranteed.

It is agreed and understood that the Owner does not warrant or guarantee that the subsurface or other conditions, natural phenomena, existing pipes, or other structures encountered during construction will be the same as those indicated in the Contract Documents.

It is further agreed and understood that no bidder or Contractor shall use or be entitled to use any of the information made available to him or obtained in any examination made by him in any manner as a basis of or ground for any claim or demand against the Owner or the Engineer, arising from or by reason of any variance which may exist between the information made available and the actual subsurface or other structures actually encountered during the construction work, except as may otherwise be expressly provided for in the Contract Documents.

15. Bid Security

Each bid must be accompanied by a certified check, a bid bond, cash, a treasurer's or cashier's check, payable to the Owner, in the amount stated in Section 00020, INVITATION TO BID. Such checks will be returned to all except the three lowest responsible and eligible bidders within five days, Saturdays, Sundays, and legal holidays excluded, after the opening of bids, and the remaining checks will be returned promptly after the Owner and the accepted bidder have executed the Contract, or if no notice of intent to award has been presented to the selected contractor within 30 days, Saturdays, Sundays and holidays excluded, after the date of the opening of bids, upon demand of the bidder at any time thereafter.

16. Right to Reject Bid

The Owner reserves the right to waive any informalities or reject any and all bids, should the Owner deem it to be in the public interest to do so.

The Owner may also reject bids which in its sole judgment are either incomplete, conditional, obscure or not responsive or which contain additions not called for, erasures not properly initialed, alterations, or similar irregularities, or the Owner may waive such omissions, conditions or irregularities.

The Owner also reserves the right to reject the bid of any bidder that the Owner considers to be unqualified based on the criteria set forth in Article 6 herein.

17. Time for Completion

The bidder must agree to commence work within ten (10) days of the date of the Notice to Proceed and to fully complete the project within the time limit stated in Section 00300, FORM OF GENERAL BID.

18. Comparison of Bids

Bids will be compared on the basis of the quantities and unit and lump sum prices set forth in the bid forms.

In the event that there is a discrepancy in Section 00300, FORM OF GENERAL BID between the lump sum or unit prices written in words and figures, the prices written in words will govern.

The Owner agrees to examine and consider each FORM OF GENERAL BID submitted in consideration of the qualifications of the bidder and the bidder's agreements, as hereinabove set forth and as set forth in Section 00300, FORM OF GENERAL BID.

19. Award of Contract

The Contract will be awarded to "the lowest responsible and eligible bidder" pursuant to General Laws Chapter 30, Section 39M, as amended. Such a bidder shall possess the skill, ability and integrity necessary for the faithful performance of the work, shall be able to furnish labor that can work in harmony with all other elements of labor employed, or to be employed, in the work, and shall otherwise comply with all applicable provisions of law.

The term of this contract shall extend from July 1, 2015 through June 30, 2016. The Town, at its sole direction, shall have the option to extend for one (1) additional year period, July 1, 2016 through June 30, 2017, with no changes in the contract price or terms and conditions, and at its sole direction with consent of the contractor, the option to extend for an additional one (1) year period, July 1, 2017 through June 30, 2018 with no changes in the contract price or terms and conditions.

Please be advised that funding for this project has not yet been obtained; therefore, any contract awarded pursuant to this invitation for Bids shall be subject to and contingent upon appropriation of sufficient funds by Town Meeting.

20. Statutes Regulating Competitive Bidding

Any bid which does not comply with the provisions of Massachusetts General Laws Chapter 30, Section 39M as amended, need not be accepted and the Owner may reject every such bid.

21. Wage Rates

Prevailing Wage Rates as determined by the Commissioner of Department of Labor and Industries under the provision of the Massachusetts General Laws, Chapter 149, Section 26 to 27G, as amended, apply to this project. It is the responsibility of the contractor, before bid opening, to request if necessary, any additional information on Prevailing Wage Rates for those tradespeople who may be employed for the proposed work under this contract.

State schedules of Prevailing wage rates are included in the Supplemental General Conditions section of the contract documents.

22. Contractor Records

The Contractor shall comply with the provisions of Massachusetts General Laws, Chapter 30, Section 39R, concerning Contractor records.

23. Insurance

The Contractor shall carry and continuously maintain until completion of the Contract, insurance as specified in the Supplemental General Conditions and in such form as shall protect him performing work covered by this Contract, or the Town of Dedham and its employees, agents and officials, from all claims and liability for damages for bodily injury, including accidental death, and for property damage, which may arise from operations under this Contract. The Contractor covenants and agrees to hold the Town and its employees, agents and officials harmless from loss or damage due to claims for personal injury and/or property damage arising from, or in connection with operations under this Contract.

24. Affirmative Action/Equal Employment Opportunity Laws and Regulations

The Town of Dedham is an affirmative action/equal opportunity owner/purchaser. The bidder's attention is directed to all applicable State Laws, Town Bylaws, and rules and regulations regarding affirmative action/equal employment opportunity requirements. Failure of a bidder to comply with any such law, bylaw, rule or regulation shall constitute grounds for the Town to reject a bid or to otherwise reject or terminate the award of the contract pursuant to these contract documents.

SECTION 00300

FORM OF GENERAL BID

Bid of _____ (hereinafter called "Bidder")*

(____) a corporation, organized and existing under the laws of the state of _____

(____) a partnership

(____) a joint venture

(____) an individual
doing business as _____

To the Town of Dedham, Massachusetts (hereinafter called "Owner").

Gentlemen:

The Bidder, in compliance with your invitation for bids for FY2016 ASPHALT PAVING AND RESURFACING, having examined the plans and specifications with related documents and the site of the proposed work, and being familiar with all of the conditions surrounding the construction of the proposed project including the availability of materials and labor, hereby proposes to furnish all labor, materials, and supplies, and to construct the project in accordance with the contract documents within the time set forth below, and at the prices stated below. These prices are to cover all expenses incurred in performing the work required under the contract documents, of which this proposal is a part.

The Bidder hereby agrees to commence work under this contract on or before a date to be specified in written "Notice to Proceed" of the Owner, and to fully complete the project by June 20, 2016. The Bidder further agrees to pay as liquidated damages the sum of one thousand ($1,000) Dollars for each consecutive calendar day thereafter as hereinafter provided in Section 00700 GENERAL CONDITIONS.

_____
*Insert corporation, partnership or individual as applicable.

Bidder acknowledges receipt of the following addenda:

No._____ Dated:_____

No._____ Dated:_____

No._____ Dated:_____

No._____ Dated:_____

The Bidder agrees to perform the base bid work described in the specifications and shown on the plans for the following lump sum or unit prices:

Item Number	Estimated Quantity	Brief Description Unit or Lump Sum Price Bid In Both Words and Figures	Total Figure
100.12	40	Front End Loader & Operator, per hour at_____ dollars and _____ cents ($_____)	$_____
100.15	120	Gradall & Operator, per hour at_____ dollars and _____ cents ($_____)	$_____
120.1	500	Unclassified Excavation, per cubic yard at_____ dollars and _____ cents ($_____)	$_____
129.	9,000	Asphalt Pavement Excavation by Cold Planer, per square yard at_____ dollars and _____ cents ($_____)	$_____
129.2	2,000	Old Pavement Excavation, per square yard at_____ dollars and _____ cents ($_____)	$_____
145.	2	Drainage Structure Abandoned, per each at_____ dollars and _____ cents ($_____)	$_____
146.	2	Drainage Structure Removed, per each at_____ dollars and _____ cents ($_____)	$_____

Item Number	Estimated Quantity	Brief Description Unit or Lump Sum Price Bid In Both Words and Figures	Total Figure
150.	50	Ordinary Borrow, per cubic yard at_____ dollars and _____ cents ($_____)	$_____
151.	250	Gravel Borrow, per cubic yard at_____ dollars and _____ cents ($_____)	$_____
156.	50	Crushed Stone, per ton at_____ dollars and _____ cents ($_____)	$_____
170.	2,500	Fine Grading and Compacting, per square yard at_____ dollars and _____ cents ($_____)	$_____
201.5	4	Pre-Cast Concrete Drain Catch Basin (Town Standard), per each at_____ dollars and _____ cents ($_____)	$_____
202.01	2	Pre-Cast Concrete Drain Manhole (Town Standard), per each at_____ dollars and _____ cents ($_____)	$_____
204.	2	Gutter Inlet, per each at_____ dollars and _____ cents ($_____)	$_____

Item Number	Estimated Quantity	Brief Description Unit or Lump Sum Price Bid In Both Words and Figures	Total Figure
205.	2	Leaching Basin (Town Standard), per each at_____ dollars and _____ cents ($_____)	$_____
220.	20	Drainage Structure Adjusted, per each at_____ dollars and _____ cents ($_____)	$_____
220.2	15	Drainage Structure Rebuilt, per foot at_____ dollars and _____ cents ($_____)	$_____
220.5	50	Drainage Structure Remodeled, per each at_____ dollars and _____ cents ($_____)	$_____
220.6	25	Sanitary Structure Rebuilt, per foot at_____ dollars and _____ cents ($_____)	$_____
220.7	15	Sanitary Structure Adjusted, per each at_____ dollars and _____ cents ($_____)	$_____
220.8	80	Sanitary Structure Remodeled, per each at_____ dollars and _____ cents ($_____)	$_____

Item Number	Estimated Quantity	Brief Description Unit or Lump Sum Price Bid In Both Words and Figures	Total Figure
222.2	5	Frame and Grate (or Cover) Town Standard (Furnish, Deliver & Install), per each at_____ dollars and _____ cents ($_____)	$_____
222.21	5	Frame and Grate (or Cover) Town Standard (Transport & Install), per each at_____ dollars and _____ cents ($_____)	$_____
223.2	5	Frame and Grate (or Cover) Remove & Dispose, per each at_____ dollars and _____ cents ($_____)	$_____
225.52	2	Trap and Hood (Town Standard), per each at_____ dollars and _____ cents ($_____)	$_____
358.	70	Gate Box Adjusted, per each at_____ dollars and _____ cents ($_____)	$_____
381.3	30	Service Box Adjusted, per each at_____ dollars and _____ cents ($_____)	$_____
402.	100	Dense Graded Crushed Stone for Sub-Base, per cubic yard at_____ dollars and _____ cents ($_____)	$_____

Item Number	Estimated Quantity	Brief Description Unit or Lump Sum Price Bid In Both Words and Figures	Total Figure
403.	73,000	Reclaimed Pavement for Base Course and/or Sub-base, per square yard at_____ dollars and _____ cents ($_____)	$_____
460.01	15,000	Asphalt Pavement – Marshall Mix, per ton at_____ dollars and _____ cents ($_____)	$_____
460.02	0	Asphalt Pavement – Superpave, per ton at_____ dollars and _____ cents ($_____)	$_____
464.	4,500	Bitumen for Tack Coat, per gallon at_____ dollars and _____ cents ($_____)	$_____
470.2	30,000	Asphalt Berm, Type A-Modified, per foot at_____ dollars and _____ cents ($_____)	$_____
472.1	100	Asphalt for Miscellaneous Work, per ton at_____ dollars and _____ cents ($_____)	$_____
482.3	5,000	Sawing Asphalt Pavement, per foot at_____ dollars and _____ cents ($_____)	$_____

Item Number	Estimated Quantity	Brief Description Unit or Lump Sum Price Bid In Both Words and Figures	Total Figure
482.34	100	Sawing Cement Concrete, per foot at_____ dollars and _____ cents ($_____)	$_____
506.	500	Granite Curb Type VB – Straight, per foot at_____ dollars and _____ cents ($_____)	$_____
506.1	100	Granite Curb Type VB – Curved, per foot at_____ dollars and _____ cents ($_____)	$_____
509.	25	Granite Transition Curb for Wheelchair Ramps – Straight, per foot at_____ dollars and _____ cents ($_____)	$_____
509.1	150	Granite Transition Curb for Wheelchair Ramps – Curved, per foot at_____ dollars and _____ cents ($_____)	$_____
509.2	2	Sloped to Vertical Granite Transition Piece, per each at_____ dollars and _____ cents ($_____)	$_____
514.	4	Granite Curb Inlet – Straight, per each at_____ dollars and _____ cents ($_____)	$_____

Item Number	Estimated Quantity	Brief Description Unit or Lump Sum Price Bid In Both Words and Figures	Total Figure
515.	2	Granite Curb Inlet – Curved, per each at_____ dollars and _____ cents ($_____)	$_____
520.11	25	Special Concrete Curb – Cast in Place, per foot at_____ dollars and _____ cents ($_____)	$_____
570.3	1,000	Asphalt Curb – Type 3, per foot at_____ dollars and _____ cents ($_____)	$_____
580.	500	Curb Removed and Reset, per foot at_____ dollars and _____ cents ($_____)	$_____
581.	3	Curb Inlet Removed and Reset, per each at_____ dollars and _____ cents ($_____)	$_____
590.	100	Curb Removed and Stacked, per foot at_____ dollars and _____ cents ($_____)	$_____
701.	500	Cement Concrete Sidewalk, per square yard at_____ dollars and _____ cents ($_____)	$_____

Item Number	Estimated Quantity	Brief Description Unit or Lump Sum Price Bid In Both Words and Figures	Total Figure
701.1	250	Cement Concrete Sidewalk at Driveways, per square yard at_____ dollars and _____ cents ($_____)	$_____
701.2	300	Cement Concrete Sidewalk at Wheelchair Ramps, per square yard at_____ dollars and _____ cents ($_____)	$_____
702.	800	Asphalt Walk Surface, per ton at_____ dollars and _____ cents ($_____)	$_____
703.	500	Asphalt Driveways, per ton at_____ dollars and _____ cents ($_____)	$_____
751.	1,000	Loam Borrow, per cubic yard at_____ dollars and _____ cents ($_____)	$_____
765.	10,000	Seeding, per square yard at_____ dollars and _____ cents ($_____)	$_____
767.8	25	Bales of Hay for Erosion Control, per bale at_____ dollars and _____ cents ($_____)	$_____

Total Bid in Words _____

Total Bid in Figures $_____

Name of Bidder:_____

The above unit prices shall include all labor, materials, bailing, shoring, removal, overhead, profit, insurance, etc., to cover the finished work of the several kinds called for.

The Bidder understands that all bids for this project are subject to the applicable bidding laws of the Commonwealth of Massachusetts, including General Laws Chapter 30, Section 39M, as amended.

The Bidder understands that the Owner reserves the right to reject any or all bids and to waive any informalities in the bidding.

The Bidder agrees that this bid shall be good and may not be withdrawn for a period of 30 days, Saturdays, Sundays and legal holidays excluded, after the opening of bids.

Within 10 days of receipt of the written notice of acceptance of this bid, the Bidder will execute the formal Agreement attached in Section 00500 CONTRACT.

Bid security is attached in the sum of five percent (5%) of the total bid in accordance with the conditions of Section 00100 INSTRUCTIONS TO BIDDERS. The bid security may become the property of the Owner in the event the contract and bond are not executed within the time set forth above.

The selected Contractor shall furnish a performance bond and a payment bond in an amount at least equal to one hundred percent (100%) of the contract prices in accordance with Section 00610 PERFORMANCE BOND, Section 00620 PAYMENT BOND, and as stipulated in Section 00700 GENERAL CONDITIONS of these specifications.

The undersigned offers the following information as evidence of his qualifications to perform the work as bid upon according to all the requirements of the plans and specifications.

1. Have been in business under present name for ____ years.

2. The names and addresses of all persons interested in the bid (if made by a partnership or corporation) as Principals, are as follows:

_____
_____
_____
_____
_____
_____

(attach supplementary list if necessary)

3. The bidder is requested to state below what work of a similar character to that included in the proposed contract he has done and state below **ALL** work has been awarded and/or completed within the last 3 years, and give references that will enable the Owner to judge his experience, skill and business standing (add supplementary page(s) if necessary).

Completion Date	Project Name	Contract Amount	Design Engineer	Reference Name	Telephone No.

a._____

_____

b._____

_____

c._____

_____

d._____

_____

e._____

_____

f._____

_____

4. Bank reference _____
(Name)

_____
(Bank)

_____
(Address)

_____
(Telephone No.)

Pursuant to M.G.L. CH. 62C, Sec 49A, I certify under the penalties of perjury that I, to my best knowledge and belief, have filed all state tax returns and paid all State Taxes Required under law.

The undersigned Bidder hereby certifies that he is able to furnish labor that can work in harmony with all other elements of labor employed or to be employed in the work and that all employees to be employed at the worksite will have successfully completed a course in construction safety and health approved by the United States Occupational Safety and Health Administration that is at least 10 hours in duration at the time the employee begins work and who shall furnish documentation of successful completion of said course with the first certified payroll report for each employee.

The undersigned Bidder hereby certifies he/she will comply with the minority workforce percentage ratio and specific affirmative action steps contained in the EEO/AA provisions of this Contract, including compliance with the Minority/Woman Business Enterprise policy as required under these contract provisions. The contractor receiving the award of the contract shall be required to obtain from each of its subcontractors a copy of the certification by said subcontractor, regardless of tier, that it will comply with the minority workforce ratio and specific affirmative action steps contained in these EEO/AA contract provisions and submit it to the contracting agency prior to the award of such subcontract.

The undersigned certifies under penalties of perjury that this bid is in all respects bona fide, fair and made without collusion or fraud with any other person. As used in this paragraph the word "person" shall mean any natural person, joint venture, partnership, corporation or other business or legal entity.

Respectfully submitted:

Date:_____ By:_____

(Signature)

_____

(SEAL - if bid is by a corporation)

(Name of Bidder)

_____

(Title)

_____

(Business Address)

_____

(City and State)

_____

(Telephone Number)

SECTION 00500

AGREEMENT

THIS AGREEMENT, made this _____ day of _____,

20___, by and between the party of the first part, the Town of Dedham, hereinafter called "OWNER," acting herein through its Town Manager, and the party of the second part,

_____ doing business as *(an individual) (a partnership) (a joint venture) (a corporation) located in the *

(City) (Town) of _____, County of _____, and State of

_____, hereinafter called "CONTRACTOR."

WITNESSETH: That for and in consideration of the payments and agreements hereinafter mentioned, to be made and performed by the OWNER, the CONTRACTOR hereby agrees with the OWNER to commence and complete the project described as follows:

FY2016 ASPHALT PAVING AND RESURFACING

hereinafter called the project, for the sum of

_____ Dollars

($_____) and all extra work in connection therewith, under the terms as stated in the Contract Documents; and at his (its or their) own proper cost and expense to furnish all the materials, supplies, machinery equipment, tools, superintendence, labor, insurance, and other accessories and services necessary to complete the said project in accordance with the conditions and prices stated in Section 00300 FORM OF GENERAL BID, Section 00700 GENERAL CONDITIONS, and Section 00800 SUPPLEMENTAL GENERAL CONDITIONS, the plans, which include all maps, plates, blue prints, and the specifications and Contract Documents as prepared by the Owner.

_____

*Strike out inapplicable term.

The CONTRACTOR hereby agrees to commence work under this Contract on or before a date to be specified in written "Notice to Proceed" of the OWNER.

The CONTRACTOR further agrees to fully complete the project by November 1, 2013.

The CONTRACTOR further agrees to pay as liquidated damages the sum of $1,000 for each consecutive calendar day thereafter as provided in the Liquidated Damages Paragraph of Section 00700 GENERAL CONDITIONS.

The CONTRACTOR agrees not to discriminate against or exclude any person from participation herein on grounds of race, religion, color, sex, age or national origin; and that it shall take affirmative actions to insure that applicants are employed, and that employees are treated during their employment, without regard to race, religion, color, sex, age, handicapped status, or national origin.

The CONTRACTOR agrees not to participate in or cooperate with an international boycott, as defined in Section 999 (b)(3) and (4) of the Internal Revenue Code of 1954, as amended, or engage in conduct declared to be unlawful by Section 2 of Chapter 151E of the Massachusetts General Laws.

The OWNER agrees to pay the CONTRACTOR in current funds for the performance of the contract, subject to additions and deductions, as provided in Section 00700 GENERAL CONDITIONS, and to make payments on account thereof as provided in the Estimates and Payments Paragraph of Section 00700 GENERAL CONDITIONS.

IN WITNESS WHEREOF, the parties to these presents have executed this contract in four (4) counterparts, each of which shall be deemed an original, in the year and day first above mentioned.

AGREED:

TOWN OF DEDHAM, MASSACHUSETTS
(Owner)

By_____

_____
(Name)

_____
(Title)

CONTRACTOR: _____

By_____

_____
(Name)

_____
(Title)

_____
(Address)

_____
(City and State)

Approved as to Form:

By_____
(Owner's Counsel)

In accordance with M.G.L. C.44, Section 31C, this is to certify that an appropriation in the amount of this contract is available therefor and that the _____ has been authorized to execute the contract and approve all requisitions and change orders.

By_____
(Owner's Accountant)

_____
(Name)

CERTIFICATE OF VOTE
(to be filed if Contractor is a Corporation)

I, _____, hereby certify that I am the duly qualified
(Secretary of the Corporation)

and acting Secretary of _____ and I further certify that a meeting of the
(Name of Corporation)

Directors of said Company, duly called and held on _____, at which
(Date of Meeting)

all Directors were present and voting, the following vote was unanimously passed:

VOTED: To authorize and empower

_____

_____

_____

_____

_____

Anyone acting singly, to execute Forms of General Bid, Contracts or Bonds on behalf of the Corporation.

I further certify that the above vote is still in effect and has not been changed or modified in any respect.

By:_____
(Secretary of Corporation)

A True Copy:

Attest:_____
(Notary Public)

My Commission Expires:_____
(Date)

Contractor's Certification

A Contractor will not be eligible for award of a contract unless such Contractor has submitted the following certification, which is deemed a part of the resulting contract:

CONTRACTOR'S CERTIFICATION

_____

Name of the General Contractor

certifies that:

1. It intends to use the following listed construction trades in the work under the contract

   _____

   _____

2. Will comply with the minority workforce ratio and specific affirmative action steps contained herein; and

3. Will obtain from each of its subcontractors and submit to the contracting or administering agency prior to the award of any subcontract under this contract the subcontractor's certification required by these bid conditions.

4. As evidenced by the signature of the Contractor's Authorized Signatory below, the Contractor certifies under the pains and penalties of perjury that the Contractor shall not knowingly use undocumented workers in connection with the performance of all Executive Branch contracts; that pursuant to federal requirements, the Contractor shall verify the immigration status of all workers assigned to such contracts without engaging in unlawful discrimination; and that the Contractor shall not knowingly or recklessly alter, falsify, or accept altered or falsified documents from any such worker(s). The Contractor understands and agrees that breach of any of these terms during the period of each contract may be regarded as a material breach, subjecting the Contractor to sanctions, including but not limited to monetary penalties, withholding of payments, contract suspension or termination.

_____

Signature of Authorized
Representative of Contractor

Subcontractor's Certification

Prior to the award of any subcontract, regardless of tier, the prospective subcontractor must execute and submit to the General Contractor the following certification, which will be deemed a part of the resulting subcontract:

SUBCONTRACTOR'S CERTIFICATION

_____

Name of the Subcontractor

certifies that:

1. It intends to use the following listed construction trades in the work under contract

   _____

   _____

2. Will comply with the minority workforce ratio and specific affirmative action steps contained herein; and

3. Will obtain from each of its subcontractors prior to the award of any subcontract under this contract the subcontractor's certification required by these bid conditions.

_____

Signature of Authorized
Representative of Subcontractor

SECTION 00610
PERFORMANCE BOND

KNOW ALL MEN BY THESE PRESENTS: That we _____
(Name of Contractor)

a _____ hereinafter called "Principal" and
(Corporation, Partnership, Joint Venture or Individual)

_____of _____, State of _____
(Surety) (City)

hereinafter called the "Surety" and licensed by the State Division of Insurance to do business under the laws of the Commonwealth of Massachusetts, are held and firmly bound to the Town of Dedham, Massachusetts, hereinafter called "Owner", in the penal sum of _____ Dollars ($_____) in lawful money of the United States, for the payment of which sum well and truly to be made, we bind ourselves, our heirs, executors, administrators and successors, jointly and severally, firmly by these presents.

THE CONDITION OF THIS OBLIGATION is such that whereas the Principal has entered into a certain contract with the Owner (the "Construction Contract"), dated the _____ day of _____, 20___, for the construction described as follows:

FY2016 ASPHALT PAVING AND RESURFACING.

NOW, THEREFORE, if the Principal shall well, truly and faithfully perform its duties, all the undertakings, covenants, terms, conditions, and agreements of the Construction Contract during the original term thereof, and any extensions thereof which may be granted by the Owner, with or without notice to the Surety, and if he shall satisfy all claims and demands incurred under the Construction Contract, and shall fully indemnify and save harmless the Owner from all costs and damages which it may suffer by reason of failure to do so, and shall reimburse and repay the Owner all outlay and expense which the Owner may incur in making good any default, then this obligation shall be void; otherwise, this obligation shall remain in full force and effect.

PROVIDED, FURTHER, that the Surety's obligation under this Bond shall arise after (1) the Owner has declared the Principal in default of the Construction Contract or (2) has declared that the Principal has failed, or is otherwise unable or unwilling, to execute the work consistent with, and in conformance to, the Construction Contract (collectively referred to as a "Contractor Default"). The determination of a Contractor Default shall be made solely by the Owner.

When the Surety's obligation under this Bond arises, the Surety, at its sole expense and at the consent and election of the Owner, shall immediately take one of following steps: (1) arrange for the Principal to perform and complete the work of the Construction Contract; (2) arrange for a contractor other than the Principal to perform and complete the work of the Construction

Contract; (3) reimburse the Owner, in a manner and at such time as the Owner shall decide, for all costs and expenses incurred by the Owner in performing and completing the work of the Construction Contract.

If the Surety does not proceed as provided in this Bond with due diligence and all deliberate speed, the Surety shall be deemed to be in default of this Bond, and the Owner shall be entitled to enforce any remedy available to the Owner.

After the Surety's obligation under this Bond arises, the Surety is obligated, to the limit of the amounts of this Bond, for (1) the correction of defective work and completion of the Construction Contract; (2) additional design, professional services, and legal costs, including attorney's fees, resulting from the Contractor Default or from the default of the Surety under this Bond; (3) any additional work beyond the Construction Contract made necessary by the Contractor Default or default of the Surety under this Bond; and (4) liquidated damages as provided in the Construction Contract, or if none are so specified, actual and foreseeable consequential damages resulting from the Contractor Default or default of the Surety under this Bond.

Any proceeding, legal or equitable, under this Bond shall be instituted in any court of competent jurisdiction in the Commonwealth of Massachusetts.

The Surety, for value received, hereby stipulates and agrees that no change, extension of time, alteration or addition to the terms of the Construction Contract or to the work to be performed thereunder or the specifications accompanying the same shall in any way affect its obligation on this bond, and it does hereby waive notice of any such change, extension of time, alteration or addition to the terms of the Construction Contract or to the work or to the specifications.

IN WITNESS WHEREOF, this instrument is executed in _____ ( ) counterparts, each one of which shall be deemed an original, this the _____ day of _____, 20___.

ATTEST:

_____
Principal

_____ By _____
(Principal Secretary)

_____

_____

_____
(Address-Zip Code)

_____ (SEAL)

Witness as to Principal

_____

_____
(Address-Zip Code)

ATTEST:

_____
Surety

_____ By _____
(Attorney-in-Fact)

_____

_____
(Address-Zip Code)

_____ (SEAL)
Witness as to Surety

_____

_____
(Address-Zip Code)

NOTE: Date of Bond must not be prior to date of Contract. If Contractor is a Partnership, all partners should execute Bond.

SECTION 00620

PAYMENT BOND

KNOW ALL MEN BY THESE PRESENTS: That we _____

_____ a_____ _____
(Name of Contractor) (Corporation, Partnership, Joint Venture or Individual)

hereinafter called "Principal" and _____ of _____,
(Surety)

State of _____ hereinafter called the "Surety" and licensed by the State
(City and State)

Division of Insurance to do business under the laws of the Commonwealth of Massachusetts, are held and firmly bound to the Town of Dedham, Massachusetts, hereinafter called "Owner", in the penal sum of _____ Dollars ($_____) in lawful money of the United States, for the payment of which sum well and truly to be made, we bind ourselves, our heirs, executors, administrators and successors, jointly and severally, firmly by these presents.

THE CONDITION OF THIS OBLIGATION is such that Whereas, the Principal entered into a certain contract with the Owner, dated the _____ day of _____, 20___, a copy of which is hereto attached and made a part hereof for the construction described as follows:

FY2016 ASPHALT PAVING AND RESURFACING.

NOW, THEREFORE, if the Principal shall promptly make payment to all persons, firms, subcontractors, and corporations furnishing materials for or performing labor in the prosecution of the work provided for in such contract, and any authorized extension or modification thereof, including all amounts due for materials, lubricants, oil, gasoline, coal and coke, repairs on machinery, equipment and tools, consumed or used in connection with the construction of such work, and all insurance premiums on said work, and for all labor, performed in such work whether by subcontractor or otherwise, then this obligation shall be void; otherwise to remain in full force and effect.

PROVIDED, FURTHER, that the said Surety, for value received hereby stipulates and agrees that no change, extension of time, alteration or addition to the terms of the contract or to the work to be performed thereunder or the specifications accompanying the same shall in any way affect its obligation on this bond, and it does hereby waive notice of any such change, extension of time, alteration or addition to the terms of this contract or to the work or to the specifications.

PROVIDED, FURTHER, that no final settlement between the Owner and the Contractor shall abridge the right of any beneficiary hereunder, whose claim may be unsatisfied.

IN WITNESS WHEREOF, this instrument is executed in ____ ( ) counterparts, each one of which shall be deemed an original, this the _____ day of _____, 20__.

ATTEST:

_____
Surety

_____ By _____
(Attorney-in-Fact)

_____

_____
(Address-Zip Code)

_____ (SEAL)
Witness as to Surety

_____

_____
(Address-Zip Code)

NOTE: Date of Bond must not be prior to date of Contract. If Contractor is a Partnership, all partners should execute Bond.

SECTION 00650
CERTIFICATE OF INSURANCE

The Contractor shall provide certificates of insurance acceptable to the OWNER prior to the commencement of the work. The minimum coverage to be provided shall be as follows:
[Consult with your insurer as to appropriate coverage]

		Occurrence	Aggregate
A.	Owners Protective Liability:		
	Bodily Injury	$1,000,000	$1,000,000
	Property Damage	$1,000,000	$1,000,000
B.	Comprehensive General Liability		
	Bodily Injury	$1,000,000	$1,000,000
	Property Damage	$1,000,000	$1,000,000
	Including: 1. Operations/Premises 2. XCU 3. Products/Completed Operations 4. Contractual as Below 5. Independent Contractors 6. Broad Form Property Damage 7. Personal Injury		
C.	Auto Liability	Per Person	Per Accident
	Bodily Injury	$1,000,000	$1,000,000
	Property Damage		$1,000,000
	Including: 1. All Owned 2. Hired 3. Non-owned		

D. Workman's Compensation
Compensation Statutory State(s)
Coverage B Limit $1,000,000 if Applicable

E. Umbrella Liability
$2,000,000 Aggregate

F. Builder's Risk Insurance - "All Risk" Completed Value Form $_____

As Specified in Contract or Agreement

CONTRACTUAL LIABILITY

To the fullest extent permitted by Laws and Regulations, CONTRACTOR shall indemnify, and hold harmless OWNER and its consultants, agents and employees from and against all claims, damages, losses and expenses, direct, indirect or consequential (including but not limited to fees and charges of engineers, architects, attorneys and other professionals and court and arbitration costs) arising out of or resulting from performance of the Work, provided that any such claim, damage, loss or expense(s) is attributable to bodily injury, sickness, disease or death, or to injury to or destruction of tangible property (other than the Work itself) including the loss of use resulting therefrom and (b) is caused in whole or in part by any negligent act or omission of CONTRACTOR, any subcontractor, any person or organization directly or indirectly employed by any of them to perform or furnish any of the Work or anyone for whose acts any of them may be liable, regardless of whether or not it is caused in part by a party indemnified hereunder or arises by or is imposed by Law and Regulations regardless of the negligence of any such party.

In any and all claims against OWNER or any of its consultants, agents or employees by any employee of CONTRACTOR, and subcontractor, any person or organization directly or indirectly employed by any of them to perform or furnish any of the Work or anyone for whose acts any of them may be liable, the indemnification obligation under the above paragraph shall not be limited in any way by any limitation on the amount or type of damages, compensation or benefits payable by or for CONTRACTOR or any such subcontractor or other person or organization under workers' or workmen's compensation acts, disability benefit acts or other employee benefits acts.

Policies B, C, D, and E shall remain in effect during the one year correction period.

Such insurance as is herein certified applies to all operations of the insured in connection with, and necessary and incidental to, the work herein described at the locations stated.

It is hereby understood and agreed that the above policies will not be restrictively amended, materially changed nor canceled without 30 days advance notice by registered mail to OWNER.

_____	_____
Authorized Representative Signature (Include Evidence of Authorization)	Address

SECTION 00700
GENERAL CONDITIONS

TABLE OF CONTENTS

ARTICLE 1 - CONTRACT DOCUMENTS 1
1.1 DEFINITIONS 1
1.1.1 THE CONTRACT DOCUMENTS 1
1.1.2 THE CONTRACT 1
1.1.3 THE WORK 1
1.1.4 THE PROJECT 1
1.1.5 "OR EQUAL" 1
1.2 EXECUTION, CORRELATION AND INTENT 2
1.3 OWNERSHIP AND USE OF DOCUMENTS 2
ARTICLE 2 2
2.1 ADMINISTRATION OF THE CONTRACT 3
ARTICLE 3 – OWNER 4
3.1 DEFINITION 4
3.2 INFORMATION AND SERVICES REQUIRED OF THE OWNER 4
3.3 OWNER'S RIGHT TO STOP THE WORK 4
3.4 OWNER'S RIGHT TO CARRY OUT THE WORK 5
ARTICLE 4 – CONTRACTOR 5
4.1 DEFINITION 5
4.2 REVIEW OF CONTRACT DOCUMENTS 5
4.3 SUPERVISION AND CONSTRUCTION PROCEDURES 6
4.4 LABOR AND MATERIALS 6
4.5 WARRANTY 6
4.6 TAXES 7
4.7 PERMITS, FEES AND NOTICES 7
4.8 SUPERINTENDENT 7
4.9 PROGRESS SCHEDULE 8
4.10 DOCUMENTS AND SAMPLES AT THE SITE 8
4.11 SHOP DRAWINGS, PRODUCT DATA AND SAMPLES 8
4.12 USE OF SITE 9
4.13 CUTTING AND PATCHING OF WORK 9
4.14 CLEANING UP 9
4.15 COMMUNICATIONS 10
4.16 ROYALTIES AND PATENTS 10
4.17 INDEMNIFICATION 10
ARTICLE 5 – SUBCONTRACTORS 11
5.1 DEFINITION 11
5.2 AWARD OF SUBCONTRACTS AND OTHER CONTRACTS FOR PORTIONS OF THE WORK 11
5.3 SUBCONTRACTUAL RELATIONS 12
ARTICLE 6 - WORK BY OWNER OR BY SEPARATE CONTRACTORS 12
6.1 OWNER'S RIGHT TO PERFORM WORK AND TO AWARD SEPARATE CONTRACTS 12
6.2 MUTUAL RESPONSIBILITY 13
6.3 OWNER'S RIGHT TO CLEAN UP 13
ARTICLE 7 - MISCELLANEOUS PROVISIONS 13
7.1 GOVERNING LAW 13
7.2 SUCCESSORS AND ASSIGNS 14
7.3 WRITTEN NOTICE 14
7.4 CLAIMS FOR DAMAGES 14
7.5 PERFORMANCE BOND AND LABOR AND MATERIAL PAYMENT BOND 14
7.6 RIGHTS AND REMEDIES 15

7.7 TESTS 15
ARTICLE 8 - TIME 15
8.1 DEFINITIONS 15
8.2 PROGRESS AND COMPLETION 16
8.3 DELAYS AND EXTENSIONS OF TIME 16
8.4 LIQUIDATED DAMAGES 17
ARTICLE 9 - PAYMENTS AND COMPLETION 18
9.1 CONTRACT SUM 18
9.2 SCHEDULE OF VALUES 18
9.3 APPLICATIONS FOR PAYMENT 18
9.4 CERTIFICATES OF PAYMENT 19
9.5 PROGRESS PAYMENTS 19
9.6 PAYMENTS WITHHELD 20
9.7 FAILURE OF PAYMENT 21
9.8 SUBSTANTIAL COMPLETION 21
9.9 FINAL COMPLETION AND FINAL PAYMENT 21
ARTICLE 10 - PROTECTION OF PERSONS AND PROPERTY 23
10.1 SAFETY PRECAUTIONS AND PROGRAMS 23
10.2 SAFETY OF PERSONS AND PROPERTY 23
10.3 EMERGENCIES 24
ARTICLE 11 - INSURANCE 24
11.1 CONTRACTOR'S LIABILITY INSURANCE 24
11.2 OWNER'S LIABILITY INSURANCE 25
11.3 PROPERTY INSURANCE 25
11.4 LOSS OF USE INSURANCE 26
ARTICLE 12 - CHANGES IN THE WORK 26
12.1 CHANGE ORDER 26
12.2 CONCEALED CONDITIONS 27
12.3 CLAIMS FOR ADDITIONAL COST 28
12.4 MINOR CHANGES IN THE WORK 28
ARTICLE 13 - UNCOVERING AND CORRECTION OF WORK 28
13.1 UNCOVERING OF WORK 28
13.2 CORRECTION OF WORK 29
13.3 ACCEPTANCE OF DEFECTIVE OR NON-CONFORMING WORK 30
ARTICLE 14 - TERMINATION OF THE CONTRACT 30
14.1 TERMINATION BY THE CONTRACTOR 30
14.2 TERMINATION BY THE OWNER 31

SECTION 00700

GENERAL CONDITIONS OF THE CONTRACT FOR CONSTRUCTION

ARTICLE 1 - CONTRACT DOCUMENTS

1.1 DEFINITIONS

1.1.1 THE CONTRACT DOCUMENTS
The Contract Documents consist of the Owner-Contractor Agreement, the Conditions of the Contract (General, Supplemental and other Conditions), the Drawings, the Specifications, all Addenda issued prior to and all Modifications issued after execution of the Contract, and all applicable laws, ordinances and regulations. A Modification is (1) a written amendment to the contract signed by both parties, (2) a Change Order, (3) a written interpretation issued by the Owner or (4) a written order for a minor change in the Work issued by the Owner pursuant to Paragraph 12.3. The Contract Documents include Bidding Documents such as the Advertisement or Invitation to Bid, the Instructions to Bidders, sample forms, the Contractor's Bid or portions of Addenda relating to any of these, or any other documents, specifically enumerated in the Owner-Contractor Agreement.

1.1.2 THE CONTRACT
The Contract Documents form the Contract for Construction. This Contract represents the entire and integrated agreement between the parties hereto and supersedes all prior negotiations, representations, or agreements, either written or oral. The Contract may be amended or modified only by a Modification as defined in Subparagraph 1.1.1.

1.1.3 THE WORK
The Work comprises the completed construction required by the Contract Documents and includes all labor necessary to produce such construction, and all materials and equipment incorporated or to be incorporated in such construction.

1.1.4 THE PROJECT
The project is the total construction of which the Work performed under the Contract Documents may be the whole or a part.

1.1.5 "OR EQUAL"
The use of the words "Or Equal" following the name of any manufacturer, vendor or proprietary product shall be understood to mean that articles or materials may be substituted which, in the opinion of the Owner, are equal in quality, durability, appearance, strength, design and performance to the articles or materials named or described and will perform adequately in providing a first-class facility.

When submitting shop drawing information on articles or materials which are being proposed as substitutes for specified items, the Contractor shall clearly identify them as such. If the articles or materials are accepted as equal to those on which dimensions on the drawings are based, any dimensional variance from those shown and/or specified shall be shown on the shop drawings prepared by the Contractor, illustrating the manner in which conformity to dimensions and design is to be obtained. All such drawings shall be subject to the approval of the Owner and the installation of the article shall not proceed without first obtaining said approval.

1.2 EXECUTION, CORRELATION AND INTENT

1.2.1 The Contract Documents shall be signed in not less than quadruplicate by the Owner and Contractor.

1.2.2 By executing the Contract, the Contractor represents that he has visited the site, familiarized himself with the local conditions under which the Work is to be performed, and correlated his observations with the requirements of the Contract Documents.

1.2.3 The intent of the Contract Documents is to include all items necessary for the proper execution and completion of the Work. The Contract Documents are complementary, and what is required by any one shall be as binding as if required by all. Work not covered in the Contract Documents will not be required unless it is consistent therewith and is reasonably inferable therefrom as being necessary to produce the intended results. Words and abbreviations which have well-known technical or trade meanings are used in the Contract Documents in accordance with such recognized meanings.

1.2.4 The organization of the Specifications into divisions, sections and articles, and the arrangement of Drawings shall not control the Contractor in dividing the Work among Subcontractors or in establishing the extent of Work to be performed by any trade.

1.3 OWNERSHIP AND USE OF DOCUMENTS

1.3.1 All Drawings, Specifications and copies thereof furnished by the Owner are and shall remain the Owner's property. They are to be used only with respect to this Project and are not to be used on any other project without the prior written consent of the Owner. With the exception of one contract set for each party to the Contract, such documents are to be returned or suitably accounted for to the Owner at the completion of the Work. Submission or distribution to meet official regulatory requirements or for other purposes in connection with the Project is not to be construed as publication in derogation of any reserved rights.

ARTICLE 2

2.1 ADMINISTRATION OF THE CONTRACT

2.1.1 The designated representative of the Owner or its Engineer will visit the site at intervals appropriate to the stage of construction to familiarize himself generally with the progress and quality of the Work and to determine in general if the Work is proceeding in accordance with the Contract Documents. However, the Owner's Representative or Engineer will not be required to make exhaustive or continuous on-site inspections to check the quality or quantity of the Work.

2.1.2 The Owner shall at all times have access to the Work wherever it is in preparation and progress. The Contractor shall provide facilities for such access so the Owner may perform its functions under the Contract Documents.

2.1.3 Based on the Owner's observations and an evaluation of the Contractor's Applications for Payment, the Owner will determine the amounts owing to the Contractor and will issue Certificates for Payment in such amounts, as provided in Paragraph 9.4.

2.1.4 The Owner will render information necessary for the proper execution or progress of the Work within twenty (20) days of any request by the contractor or in accordance with any time limit agreed upon.

2.1.5 The Owner will have authority to reject Work which does not conform to the Contract Documents. Whenever, in his opinion, he considers it necessary or advisable for the implementation of the intent of the Contract Documents, he will have authority to require special inspection or testing of the Work in accordance with Subparagraph 7.7.2 whether or not such Work be then fabricated, installed or completed. Any such rejection of work shall not relieve the Contractor of the responsibility for maintaining protection of the Work and the Owner's property.

2.1.6 The Owner or its Engineer will review and approve or take other appropriate action upon Contractor's submittals such as Shop Drawings, Product Data and Samples, but only for conformance with the design concept of the Work and with the information given in the Contract Documents. Such action shall be taken with reasonable promptness so as to cause no delay. The Owner's approval of a specific item shall not indicate approval of an assembly of which the item is a component.

2.1.7 The Owner will prepare Change Orders in accordance with Article 12, and will have authority to order minor changes in the Work as provided in Subparagraph 12.4.1.

2.1.8 The Owner will conduct inspections to determine the date of Substantial Completion and Final Completion, will review written warranties and related documents required by the Contract and assembled by the Contractor, and will

issue a final Certificate for Payment upon compliance with the requirements of Paragraph 9.9.

ARTICLE 3 – OWNER

3.1 DEFINITION

3.1.1 The Owner is the person or entity identified as such in the Owner-Contractor Agreement and is referred to throughout the Contract Documents as if singular in number and masculine in gender. The term Owner means the Owner or his authorized representative, which for this Project shall be the Town Manager.

3.1.2 The Engineer for the Project shall be the Director of Engineering.

3.2 INFORMATION AND SERVICES REQUIRED OF THE OWNER

3.2.1 The Owner shall, at the time of execution of the Agreement and any subsequent Change Orders, certify for the Contractor that financial arrangements have been made to fulfill the Owner's obligations under the Contract.

3.2.2 The Owner shall furnish all surveys describing the physical characteristics, legal limitations and utility locations for the site of the Project, and a legal description of the site.

3.2.3 Except as provided in Subparagraph 4.7.1. Owner shall secure and pay for necessary approvals, easements, assessments and charges required for the construction, use or occupancy of permanent structures or for permanent changes in existing facilities.

3.2.4 Information or services under the Owner's control shall be furnished by the Owner with reasonable promptness to avoid delay in the orderly progress of the Work.

3.2.5 The Owner will furnish the Contractor with (2) copies of all Drawings and Specifications and revisions issued during the progress of the Work; all additional copies will be furnished upon request at the cost of reproduction.

3.2.6 The Owner, through its designated agent or Engineer, shall forward all instructions directly to the Contractor.

3.2.7 The foregoing are in addition to other duties and responsibilities of the Owner enumerated herein and especially those in respect to Work by Owner or by Separate Contractors, Payments and Completion, and Insurance in Articles 6, 9 and 11 respectively.

3.3 OWNER'S RIGHT TO STOP THE WORK

3.3.1 If the Contractor fails to correct defective Work as required by Paragraph 13.2 or fails to carry out the Work in accordance with the Contract Documents or if the Owner shall for any other reason so require, the Owner, by a written order signed personally or by an agent specifically so empowered by the Owner in writing, may order the Contractor to stop the Work, or any portion thereof, until the cause for such order has been eliminated or until further written notice from the Owner; however, this right of the Owner to stop the Work shall not give rise to any duty on the part of the Owner to exercise this right for the benefit of the Contractor or any other person or entity, except to the extent required by Subparagraph 6.1.3. The Contractor shall resume the Work after such stoppage promptly upon written notice to do so from the Owner. If such stoppage is required through no fault of the Contractor, the Contract Time (and the dates for achieving Substantial Completion and Final Completion) shall be extended by a period equal to the period of the stoppage, and the Contractor shall be compensated for its reasonable and justifiable costs incurred as a result of such stoppage.

3.4 OWNER'S RIGHT TO CARRY OUT THE WORK

3.4.1 If the Contractor defaults or neglects to carry out the Work in accordance with the Contract Documents and fails within seven days after receipt of written notice from the Owner to commence and continue correction of such default or neglect with diligence and promptness, the Owner may, without prejudice to any other remedy he may have, perform such work or cause such work to be performed and/or make good such deficiencies. In such case an appropriate Change Order shall be issued deducting from the payments then or thereafter due the Contractor the cost of correcting such deficiencies, including compensation for additional services made necessary by such default, neglect or failure. If the payments then or thereafter due the Contractor are not sufficient to cover the amount, the Contractor shall pay the difference to the Owner.

ARTICLE 4 – CONTRACTOR

4.1 DEFINITION

4.1.1 The Contractor is the person or entity identified as such in the Owner-Contractor Agreement and is referred to throughout the Contract Documents as if singular in number and masculine in gender. The term Contractor means the Contractor or his authorized representative.

4.2 REVIEW OF CONTRACT DOCUMENTS

4.2.1 The Contractor shall carefully study and compare the Contract Documents and shall at once report to the Owner any error, inconsistency or omission he may discover. The Contractor shall not be liable to the Owner for any damage resulting from errors, inconsistencies or omissions in the Contract Documents

which he discovers but shall be liable for damage to the extent he reasonably should have but failed to discover such errors, inconsistencies or omissions. The Contractor shall perform no portion of the Work at any time without Contract Documents or, where required, approved Shop Drawings, Product Data or Samples for such portion of the Work.

4.3 SUPERVISION AND CONSTRUCTION PROCEDURES

4.3.1 The Contractor shall supervise and direct the Work, using his best skill and attention which shall not be less than such state of skill and attention generally rendered by the contracting profession for projects similar to the Project in scope, difficulty and location. The Contractor shall maintain adequate supervisory personnel at the Premises during the performance of the Work. He shall be solely responsible for all construction means, methods, techniques, sequences and procedures and for coordinating all portions of the Work under the Contract.

4.3.2 The Contractor shall be responsible to the Owner for the acts and omissions of his employees, Subcontractors and their agents and employees, and other persons performing any of the Work under a contract with the Contractor. This obligation shall also extend to the presence on the Site of suppliers of materials or equipment, their employees, contractors, and agents engaged in the work.

4.3.3 The Contractor shall not be relieved from his obligations to perform the Work in accordance with the Contract Documents either by the activities or duties of the Owner in its administration of the Contract, or by inspection, tests or approvals required or performed under Paragraph 7.7 by persons other than the Contractor.

4.4 LABOR AND MATERIALS

4.4.1 Unless otherwise provided in the Contract Documents, the Contractor shall provide and pay for all labor, materials, equipment, tools, construction equipment and machinery, water, heat, utilities, transportation, and other facilities and service necessary for the proper execution and completion of the Work, whether temporary or permanent and whether or not incorporated or to be incorporated in the Work.

4.4.2 The Contractor shall at all times enforce strict discipline and good order among his employees and shall not employ on the Work any unfit person or anyone not skilled in the task assigned to him including all persons on the Site controlled directly or indirectly by the Contractor.

4.5 WARRANTY

4.5.1 The Contractor warrants to the Owner that all materials and equipment furnished under this Contract will be new and of recent manufacture unless otherwise permitted in writing by the Owner and that all Work will be of good quality, free

from faults and defects and in conformance with the Contract Documents. All Work not conforming to these requirements, including substitutions not properly approved and authorized, may be considered defective and, promptly after written notification of non-conformance, shall be repaired or replaced by the Contractor with Work conforming to such requirements. If required by the Owner, the Contractor shall furnish satisfactory evidence as to the kind and quality of materials and equipment. This warranty is not limited by the provisions of Paragraph 13.2.

4.6 TAXES

4.6.1 The Contractor shall pay all applicable sales, consumer, use and other similar taxes for the Work or portion thereof provided by the Contractor which are legally enacted at the time bids are received, whether or not yet effective.

4.7 PERMITS, FEES AND NOTICES

4.7.1 Unless otherwise expressly provided in the Supplemental General Conditions, the Contractor shall secure and pay for all permits and fees, licenses and inspections necessary for the proper execution and completion of the Work which are customarily secured after execution of the Contract and which are legally required at the time the bids are received, and the same shall at all times be the property of the Owner and shall be delivered to the Owner upon completion of the Project.

4.7.2 The Contractor shall give all notices and comply with all federal, state and local laws, ordinances, rules, regulations and lawful orders of any public authority bearing on the performance of the Work. The Contractor shall provide the Owner with reproductions of all permits, licenses and receipts for any fees paid. The Owner represents that it has disclosed to the Contractor all orders and requirements known to the Owner of any public authority particular to this Contract.

4.7.3 If the Contractor observes that any of the Contract Documents are at variance with applicable laws, statutes, codes and regulations in any respect, he shall promptly notify the Owner in writing, and any necessary changes shall be accomplished by appropriate Modification.

4.7.4 If the Contractor performs any Work which he knows or should know is contrary to such laws, ordinances, rules and regulations, and without such notice to the Owner, he shall assume full responsibility therefor and shall bear all costs attributable thereto.

4.8 SUPERINTENDENT

4.8.1 The Contractor shall employ a competent superintendent and necessary assistants who shall be in attendance at the Project site at all times during the progress of the

Work. The superintendent shall represent the Contractor and all communications given to the superintendent shall be as binding as if given to the Contractor. Important communications shall be confirmed in writing. Other communications shall be so confirmed on written request in each case.

4.9 PROGRESS SCHEDULE

4.9.1 The Contractor, immediately after being awarded the Contract, shall prepare and submit for the Owner's information an estimated progress schedule for the Work. The progress schedule shall be related to the entire Project to the extent required by the Contract Documents, and shall provide for expeditious and practicable execution of the Work.

4.10 DOCUMENTS AND SAMPLES AT THE SITE

4.10.1 The Contractor shall maintain at the site for the Owner one record copy of all Drawings, Specifications, Addenda, Change Orders and other Modifications, and "As-Built" Drawings and Specifications in good order and marked currently to record all changes made during construction, and approved Shop Drawings, Product Data and Samples. These shall be available to the Owner upon completion of the Work.

4.11 SHOP DRAWINGS, PRODUCT DATA AND SAMPLES

4.11.1 Shop Drawings are drawings, diagrams, schedules and other data specially prepared for the Work by the Contractor or any Subcontractor, manufacturer, supplier or distributor to illustrate some portion of the Work.

4.11.2 Product Data are illustrations, standard schedules, performance charts, instructions, brochures, diagrams and other information furnished by the Contractor to illustrate a material, product or system for some portion of the Work.

4.11.3 Samples are physical examples which illustrate materials, equipment or workmanship and establish standards by which the Work will be judged.

4.11.4 The Contractor shall review, approve and submit, with reasonable promptness and in such sequence as to cause no delay in the Work or in the work of the Owner or any separate contractor, all Shop Drawings, Product Data and Samples required by the Contract Documents.

4.11.5 By approving and submitting Shop Drawings, Product Data and Samples, the Contractor represents that he has determined and verified all materials, field measurements, and field construction criteria related thereto, or will do so, and that he has checked and coordinated the information contained within such submittals with the requirements of the Work and of the Contract Documents.

4.11.6 The Contractor shall not be relieved of responsibility for any deviation from the requirements of the Contract Documents by the Owner's approval of Shop Drawings, Product Data or Samples or the Engineer's approval of the same unless the Contractor has specifically informed the Owner or Engineer in writing of such deviation at the time of submission and the Owner or Engineer has given written approval to the specific deviation. The Contractor shall not be relieved from responsibility from errors or omissions in the Shop Drawings, Product Data or Samples by the Owner's approval thereof.

4.11.7 The Contractor shall direct specific attention, in writing or on resubmitted Shop Drawings, Product Data or Samples, to revisions other than those requested by the Owner or its Engineer on previous submittals.

4.11.8 No portion of the Work requiring submission of a Shop Drawing, Product Data or Sample shall be commenced until the submittal has been approved by the Owner or Engineer. All such portions of the Work shall be in accordance with approved submittals.

4.12 USE OF SITE

4.12.1 The Contractor shall confine operations at the site to areas permitted by law, ordinances, permits and the Contract Documents and shall not unreasonably encumber the site with any materials or equipment.

4.13 CUTTING AND PATCHING OF WORK

4.13.1 The Contractor shall be responsible for all cutting, fitting or patching that may be required to complete the Work or to make its several parts fit together properly.

4.13.2 The Contractor shall not damage or endanger any portion of the Work or the work of the Owner or any separate contractors by cutting, patching or otherwise altering any work, or by excavation. The Contractor shall not cut or otherwise alter the work of the Owner or any separate contractor except with the written consent of the Owner and of such separate contractor. The Contractor shall not unreasonably withhold from the Owner or any separate contractor his consent to cutting or otherwise altering the Work.

4.14 CLEANING UP

4.14.1 The Contractor at all times shall keep the premises free from accumulation of waste materials or rubbish caused by his operations. At the completion of the Work he shall remove all his waste materials and rubbish from and about the Project in full compliance with all applicable laws and regulations as well as all his tools, construction equipment, machinery and surplus materials and the Project shall be thoroughly cleaned and ready for immediate occupancy by the Owner.

4.14.2 If the Contractor fails to clean up at the completion of the Work, the Owner may do so as provided in Paragraph 3.4 and the cost thereof shall be charged to the Contractor.

4.15 COMMUNICATIONS

4.15.1 The Contractor shall forward all communications to the Owner through the Director of Engineering, David J. Field, P.E..

4.16 ROYALTIES AND PATENTS

4.16.1 The Contractor shall pay all royalties and license fees. He shall defend all suits or claims for infringement of any patent rights and shall save the Owner harmless from loss on account thereof, except that the Owner shall be responsible for all such loss when a particular design, process or the product of a particular manufacturer or manufacturers is specified, but if the Contractor believes or has reason to believe that the design, process or product specified is an infringement of a patent, he shall be responsible for such loss unless he promptly gives such information to the Owner, and thereafter the Owner insists on the use of the design, process or products specified.

4.17 INDEMNIFICATION

4.17.1 To the fullest extent permitted by law, the Contractor shall indemnify and hold harmless the Owner, the Engineer and their agents and employees from and against all claims, damages, losses and expenses, including but not limited to attorneys' fees, arising out of or resulting from the performance of the Work, provided that any such claim, damage, loss or expense (1) is attributable to bodily injury, sickness, disease or death, or to injury to or destruction of tangible property (other than the Work itself) including the loss of use resulting therefrom, and (2) is caused in whole or in part by any negligent act or omission of the Contractor, any Subcontractor, anyone directly or indirectly employed by any of them or anyone for whose acts any of them may be liable, regardless of whether or not it is caused in part by a party indemnified hereunder. Such obligation shall not be construed to negate, abridge, or otherwise reduce any other right or obligation of indemnity which would otherwise exist as to any party or person described in this Paragraph 4.17.

4.17.2 In any and all claims against the Owner the Engineer or any of their agents or employees by any employee of the Contractor, any Subcontractor, anyone directly or indirectly employed by any of them or anyone for whose acts any of them may be liable, the indemnification obligation under this Paragraph 4.17 shall not be limited in any way by any limitation on the amount or type of damages, compensation or benefits payable by or for the Contractor or any Subcontractor

under workers' or workmen's compensation acts, disability benefit acts or other employee benefit acts.

4.17.3 The obligations of the Contractor under this paragraph 4.17 shall not extend to the liability of the Owner, the Engineer, their agents or employees, arising out of (1) the preparation or approval of maps, drawings, opinions, reports, surveys, change orders, designs or specifications, or (2) written directions or instructions given by the Owner, the Engineer, their agents or employees, provided they are the sole cause of the injury or damage.

ARTICLE 5 – SUBCONTRACTORS

5.1 DEFINITION

5.1.1 A Subcontractor is a person or entity who has a direct contract with the Contractor to perform any of the Work at the site. The term Subcontractor is referred to throughout the Contract Documents as if singular in number and masculine in gender and means a Subcontractor or his authorized representatives. The term Subcontractor does not include any separate contractor or his subcontractors.

5.1.2 A Sub-subcontractor is a person or entity who has a direct or indirect contract with a Subcontractor to perform any of the Work at the site. The term Sub-subcontractor is referred to throughout the Contract Documents as if singular in number and masculine in gender and means a Sub-subcontractor or an authorized representative thereof.

5.2 AWARD OF SUBCONTRACTS AND OTHER CONTRACTS FOR PORTIONS OF THE WORK

5.2.1 Unless otherwise required by the Contract Documents or the Bidding Documents, the Contractor, as soon as practicable after the award of the Contract, shall furnish to the Owner in writing the names of the persons or entities (including those who are to furnish materials or equipment fabricated to a special design) proposed for each of the principal portions of the Work. The Owner will reply to the Contractor in writing within twenty (20) days stating whether or not the Owner, after due investigation, has reasonable objection to any such proposed person or entity.

5.2.2 The Contractor shall not contract with any such proposed person or entity to whom the Owner has made reasonable objection under the provisions of Subparagraph 5.2.1. The Contractor shall not be required to contract with anyone to whom he has a reasonable objection.

5.2.3 If the Owner has reasonable objection to any such proposed person or entity, the Contractor shall submit a substitute to whom the Owner has no reasonable objection.

5.2.4 The Contractor shall make no substitution for any Subcontractor, person or entity previously selected if the Owner makes reasonable objection to such substitution.

5.3 SUBCONTRACTUAL RELATIONS

5.3.1 By an appropriate agreement, written where legally required for validity, the Contractor shall require each Subcontractor, to the extent of the Work to be performed by the Subcontractor, to be bound to the Contractor by the terms of the Contract Documents, and to assume toward the Contractor all the obligations and responsibilities which the Contractor, by these Documents, assumes toward the Owner. Said agreement shall preserve and protect the rights of the Owner under the Contract Documents with respect to the Work to be performed by the Subcontractor so that the subcontracting thereof will not prejudice such rights. Where appropriate, the Contractor shall require each Subcontractor to enter into similar agreements with his Sub-subcontractors. The Contractor shall make availability to each proposed Subcontractor, prior to the execution of the Subcontract, copies of the Contract Documents to which the Subcontractor will be bound by this Paragraph 5.3, and identify to the Subcontractor any terms and conditions of the proposed Subcontract which may be at variance with the Contract Documents. Each Subcontractor shall similarly make copies of such Documents available to his Sub-subcontractors. The Contractor shall be fully responsible to the Owner for the acts and omissions of all Subcontractors and other entities or persons directly or indirectly employed by him to perform the Work. If requested by the Owner, the form and substance of any Subcontract with the Contractor shall be subject to the prior written consent of the Owner, which consent shall not be unreasonably withheld or delayed.

ARTICLE 6 - WORK BY OWNER OR BY SEPARATE CONTRACTORS

6.1 OWNER'S RIGHT TO PERFORM WORK AND TO AWARD SEPARATE CONTRACTS

6.1.1 The Owner reserves the right to perform work related to the Project with his own forces, and to award separate contracts in connection with other portions of the Project or other work on the site under these or similar Conditions of the Contract. If the Contractor claims that delay or additional cost is involved because of such action by the Owner, he shall make such claim as provided elsewhere in the Contract Documents.

6.1.2 When separate contracts are awarded for different portions of the Project or other work on the site, the term Contractor in the Contract Documents in each case shall mean the Contractor who executes each separate Owner-Contractor Agreement.

6.1.3 The Owner will provide for the coordination of the work of his own forces and of each separate contractor with the Work of the Contractor, who shall cooperate therewith as provided in Paragraph 6.2.

6.2 MUTUAL RESPONSIBILITY

6.2.1 The Contractor shall afford the Owner and separate contractors reasonable opportunity for the introduction and storage of their materials and equipment and the execution of their work, and shall connect and coordinate his Work with theirs as required by the Contract Documents.

6.2.2 If any part of the Contractor's Work depends for proper execution or results upon the work of the Owner or any separate contractor, the Contractor shall, prior to proceeding with the Work, promptly report to the Owner any apparent discrepancies or defects in such other work that render it unsuitable for such proper execution and results. Failure of the Contractor so to report shall constitute an acceptance of the Owner's or separate contractors' work as fit and proper to receive his Work, except as to defects which may subsequently become apparent in such work by others.

6.2.3 Any costs caused by defective or ill-timed work shall be borne by the party responsible therefor.

6.2.4 Should the Contractor cause damage to the work or property of the Owner, or to other work on the site, the Contractor shall promptly remedy such damage as provided in Subparagraph 10.2.5.

6.2.5 Should the Contractor wrongfully cause damage to the work or property of any separate contractor, the Contractor shall upon due notice promptly attempt to settle with such other contractor by agreement, or otherwise to resolve the dispute. If such separate contractor sues or initiates an arbitration proceeding against the Owner on account of any damage alleged to have been caused by the Contractor, the Owner shall notify the Contractor who shall defend such proceedings at the Contractor's expense, and if any judgment or award against the Owner arises therefrom the Contractor shall pay or satisfy it and shall reimburse the Owner for all attorneys' fees and court or arbitrations costs which the Owner has incurred.

6.3 OWNER'S RIGHT TO CLEAN UP

6.3.1 If a dispute arises between the Contractor and separate contractors as to their responsibility for cleaning up as required by Paragraph 4.15, the Owner may clean up and charge the cost thereof to the contractors responsible therefor.

ARTICLE 7 - MISCELLANEOUS PROVISIONS

7.1 GOVERNING LAW

7.1.1 The Contract shall be governed by the law of the Commonwealth of Massachusetts. All applicable provisions of Federal, state, or local laws, by-laws, rules, or regulations are incorporated into the Contract as if fully set forth herein, and shall prevail over any conflicting provisions of the General or Supplemental General Conditions.

7.2 SUCCESSORS AND ASSIGNS

7.2.1 The Owner and the Contractor each bind himself, his partners, successors, assigns and legal representatives to the other party hereto and to the partners, successors, assigns and legal representatives of such other party in respect to all covenants, agreements and obligations contained in the Contract Documents. The Contractor shall not assign the Contract or sublet it as a whole without the written consent of the Owner, nor shall the Contractor assign any moneys due or to become due to him hereunder, without the previous written consent of the Owner.

7.3 WRITTEN NOTICE

7.3.1 Written notice shall be deemed to have been duly served if delivered in person to the individual or member of the firm or entity or to an officer of the corporation for whom it was intended, or if delivered at or sent by registered or certified mail to the last business address known to him who gives the notice. Written Notice to the Owner shall be delivered to the Director of Engineering, 55 River Street, Dedham, MA 02026.

7.4 CLAIMS FOR DAMAGES

7.4.1 Should either party to the Contract suffer injury or damage to person or property because of any act or omission of the other party or of any of his employees, agents or others for whose acts he is legally liable, claim shall be made in writing to such other party within a reasonable time after the first observance of such injury or damage. The reasonable time shall not exceed fourteen days.

7.5 PERFORMANCE BOND AND LABOR AND MATERIAL PAYMENT BOND

7.5.1 The Contractor shall furnish a Performance Bond in an amount at least equal to one hundred percent (100%) of the Contract price as security for the faithful performance of this Contract and also a Payment Bond in an amount not less than one hundred percent (100%) of the Contract price as security for the payment of all persons performing labor on the project under this Contract and furnishing materials in connection with this Contract. The Performance Bond and the Payment Bond may be in one or in separate instruments in accordance with local law, and in a form acceptable to the Owner, and shall remain in effect through the one-year warranty period.

7.6 RIGHTS AND REMEDIES

7.6.1 The duties and obligations imposed by the Contract Documents and the rights and remedies available thereunder shall be in addition to and not a limitation of any duties, obligations, rights and remedies otherwise imposed or available by law, except as otherwise set forth therein.

7.6.2 No action or failure to act by the Owner, the Engineer or Contractor shall constitute a waiver of any right or duty afforded any of them under the Contract, nor shall any such action or failure to act constitute an approval of or acquiescence in any breach thereunder, except as may be specifically agreed in writing.

7.7 TESTS

7.7.1 If the Contract Documents, laws, ordinances, rules, regulations or orders of any public authority having jurisdiction require any portion of the Work to be inspected, tested or approved, the Contractor shall give the Owner and Engineer timely notice of its readiness so the Owner and Engineer may observe such inspection, testing or approval. The Contractor shall bear all costs of such inspections, tests or approvals conducted by public authorities which are normal and customary for the type of work required by the Contract. Unless otherwise provided, the Owner shall bear all costs of other inspections, tests or approvals. All testing methods, organizations, and personnel shall be approved by the Owner or Engineer before the start of testing Work, without regard to what party will ultimately pay for such Work.

7.7.2 If the Owner or Engineer determines that any Work requires special inspection, testing, or approval which Subparagraph 7.7.1 does not include, it will instruct the Contractor to order such special inspection, testing or approval, and the Contractor shall give notice as provided in Subparagraph 7.7.1. If such special inspection or testing reveals a failure of the Work to comply with the requirements of the Contract Documents, the Contractor shall bear all costs thereof, including compensation for the Owner's additional services made necessary by such failure; otherwise the Owner shall bear such costs, and an appropriate Change Order shall be issued.

7.7.3 Required certificates of inspection, testing or approval shall be secured by the Contractor and promptly delivered by him to the Owner and Engineer.

7.7.4 If the Owner or Engineer is to observe the inspections, tests or approvals, he will do so promptly and, where practicable, at the source of supply.

ARTICLE 8 - TIME

8.1 DEFINITIONS

8.1.1 Unless otherwise provided, the Contract Time is the period of time allotted in the Contract Documents for Substantial and Final Completion of the Work as defined in Subparagraph 8.1.3, including authorized adjustments thereto. Time is of the essence with regard to completion of the Work required by the Contract.

8.1.2 The date of commencement of the Work is the date established in a notice to proceed. If there is no notice to proceed, it shall be the date of the Owner-Contractor Agreement or such other date as may be established therein.

8.1.3 The Date of Substantial Completion of the Work or designated portion thereof is the Date certified by the Owner when construction is substantially complete, in accordance with the Contract Documents, other than only custom punch list items, the lack of or completion of which will not interfere with the Owner's use, so the Owner can lawfully occupy and utilize the Work or designated portion thereof for the use for which it is intended. The Date of Final Completion of the Work is the date on which the Owner issues its final Certificate for Payment in accordance with Paragraph 9.9.1 hereof.

8.1.4 The term day as used in the Contract Documents shall mean calendar day unless otherwise specifically designated.

8.2 PROGRESS AND COMPLETION

8.2.1 All time limits stated in the Contract Documents are of the essence of the Contract.

8.2.2 The Contractor shall begin the Work on the date of commencement as defined in Subparagraph 8.1.2. He shall carry the Work forward expeditiously with adequate forces and shall achieve Substantial Completion within the Contract Time, and Final Completion thereafter in accordance with the provisions of the Contract Documents.

8.3 DELAYS AND EXTENSIONS OF TIME

8.3.1 If the Contractor is delayed at any time in the progress of the Work by any act or neglect of the Owner or Engineer or by any employee of the Owner or Engineer, or by any separate contractor employed by the Owner or Engineer, or by changes ordered in the Work, or by labor disputes, fire, unusual delay in transportation, adverse weather conditions not reasonably anticipated, unavoidable casualties, or any causes beyond the Contractor's or its Subcontractor's control, or by delay authorized by the Owner, then, provided such delay in no way results from the act or neglect of the Contractor or any of its Subcontractors, the Contract Time shall be extended by Change Order for such reasonable time as the Owner may determine.

8.3.2 Any claim for extension of time shall be made in writing to the Owner not more than seven (7) days after the commencement of the delay; otherwise it shall be waived. In the case of a continuing delay only one claim is necessary. The Contractor shall provide an estimate of the probable effect of such delay on the progress of the Work.

8.3.3 If no agreement is made stating the dates upon which interpretations shall be furnished, then no claim for delay shall be allowed on account of failure to furnish such interpretation until fifteen days after written request is made for them, and not then unless such claim is reasonable.

8.4 LIQUIDATED DAMAGES

8.4.1 If the Contractor shall neglect, fail or refuse to complete the work within the time herein specified, or any proper extension thereof granted by the Owner, then the Contractor does hereby agree, as a part consideration for the awarding of this Contract, to pay to the Owner the amount specified in the Contract, not as a penalty but as liquidated damages for such breach of contract as hereinafter set forth, for each and every calendar day that the Contract shall be in default after the time stipulated in the Contract for completing the work.

The said amount is fixed and agreed upon by and between the Contractor and the Owner because of the impracticability and extreme difficulty of fixing and ascertaining the actual damages the Owner would in such event sustain, and said amount is agreed to be the amount of damages which the Owner would sustain and said amount shall be retained from time to time by the Owner from current periodical estimates.

8.4.2 It is further agreed that time is of the essence of each and every portion of this Contract and of the specifications wherein as definite and certain length of times if fixed for the performance of any act whatsoever; and where under the Contract an additional time is allowed for the completion of any work, the new time limit fixed by such extension shall be of the essence of this contract.

8.4.3 Provided, that the contractor shall not be charged with liquidated damages or any excess cost when the Owner determines that the Contractor is without fault and the Contractor's reasons for the time extension are acceptable to the Owner; Provided, further, that the Contractor shall not be charged with liquidated damages or any excess cost when the delay in completion of the work is due:

(1) to any preference, priority or allocation order duly issued by the Government;

(2) to unforeseeable cause beyond the control and without the fault of negligence of the Contractor, including, but not restricted to, acts of God, or of the public enemy, acts of the Owner, acts of another Contractor in the performance of a

contract with the Owner, fires, floods, epidemics, quarantine restrictions, strikes, freight embargoes, and severe weather; and

(3) to any delays of subcontractors or suppliers occasioned by any of the causes specified in subsection (1.) and (2.) of this article:

8.4.4 Provided, further, that the Contractor shall, within ten (10) days from the beginning of such delay, unless the Owner shall grant a further period of time prior to the date of final settlement of the Contract, notify the Owner, in writing, of the causes of the delay, who shall ascertain the facts and extent of the delay and notify the Contractor within a reasonable time of its decision in the matter.

ARTICLE 9 - PAYMENTS AND COMPLETION

9.1 CONTRACT SUM

9.1.1 The Contract Sum is stated in the Owner-Contractor Agreement and, including authorized adjustments thereto, is the total amount payable by the Owner to the Contractor for the performance of the Work under the Contract Documents.

9.2 SCHEDULE OF VALUES

9.2.1 Before the first Application for Payment, the Contractor shall submit to the Owner a schedule of values allocated to the various portions of the Work, prepared in such form and supported by such data to substantiate its accuracy as the Owner may require. This schedule, unless objected to by the Owner, shall be used only as a basis for the Contractor's Application for Payment.

9.3 APPLICATIONS FOR PAYMENT

9.3.1 The Contractor shall submit to the Owner an itemized Application for Payment supported by such data substantiating the Contractor's right to payment as provided elsewhere in the Contract Documents for the period ending the 25th day of each month within the Contract period.

9.3.2 Unless otherwise provided in the Contract Documents, payments will be made on account of materials or equipment not incorporated in the Work but delivered and suitably stored at the site and, if approved in advance by the Owner, payments may similarly be made for materials or equipment suitably stored at some other location agreed upon in writing. Payments for materials or equipment stored on or off the site shall be conditioned upon submission by the Contractor of bills of sale or such other procedures satisfactory to the Owner to establish the Owner's title to such materials or equipment or otherwise protect the Owner's interest, including applicable insurance and transportation to the site for those materials and equipment stored off the site. The Contractor shall assume responsibility to protect all such materials from loss or damage at no cost to the Owner, until they

are finally incorporated into the Work, whether or not they have been paid for by the Owner.

9.3.3 The Contractor warrants that title to all Work, materials and equipment covered by an Application for Payment will pass to the Owner either by incorporation in the construction or upon the receipt of payment by the Contractor, whichever occurs first, free and clear of all liens, claims, security interests or encumbrances, hereinafter referred to in this Article 9 as "liens"; and that no Work, materials or equipment covered by an Application for Payment will have been acquired by the Contractor, or by any other person performing Work at the site or furnishing materials and equipment for the Project, subject to an agreement under which an interest therein or an encumbrance thereon is retained by the seller or otherwise imposed by the Contractor or such other person.

9.4 CERTIFICATES OF PAYMENT

9.4.1 The Owner will, within ten days after the receipt of the Contractor's Application for Payment, issue a Certificate for Payment to the Contractor for such amount as the Owner determines is properly due, or notify the Contractor in writing his reasons for withholding a Certificate as provided in Subparagraph 9.6.1.

9.4.2 The issuance of a Certificate for Payment will constitute a representation by the Owner, based on its observations at the site as provided in Subparagraph 3.2.7 and the data comprising the application for Payment, that the Work has progressed to the point indicated; that, to the best of his knowledge, information and belief, the quality of Work is in accordance with the Contract Documents (subject to an evaluation of the Work for conformance with the Contract Document upon Substantial Completion, to the results of any subsequent tests required by or performed under the Contract Documents correctable prior to completion, and to any specific qualifications stated in his Certificate); and that the Contractor is entitled to payment in the amount certified. However, by issuing a Certificate for Payment, the Owner shall not thereby be deemed to represent that he has made exhaustive or continuous on-site inspections to check the quality or quantity of the Work or that he has reviewed the construction means, methods, techniques, sequences or procedures, or that he has made any examination to ascertain how or for what purpose the Contractor has used the moneys previously paid on account of the Contract Sum.

9.5 PROGRESS PAYMENTS

9.5.1 After the Owner has issued a Certificate for Payment, the Owner shall make payment in the manner and within the time provided in the Contract Documents. The Owner reserves the right to a 5% general retainage from each progress payment, which retainage shall be released to the Contractor upon substantial completion.

9.5.2 The Contractor shall promptly pay each Subcontractor, upon receipt of payment from the Owner, out of the amount paid to the Contractor on account of such Subcontractor's Work, the amount to which said Subcontractor is entitled, reflecting the percentage actually retained, if any, from payments to the Contractor on account of such Subcontractor's Work. The Contractor shall, by an appropriate agreement with each Subcontractor, require each Subcontractor to make payments to his Sub-subcontractors in similar manner.

9.5.3 The Owner may, on request and at his discretion, furnish to any Subcontractor, if practicable, information regarding the percentages of completion or the amounts applied for by the Contractor and the action taken thereon by the Owner on account of Work done by such Subcontractor.

9.5.4 The Owner shall not have any obligation to pay or to see to the payment of any moneys to any Subcontractor except as may otherwise be required by law.

9.5.5 No Certificate for a progress payment, nor any progress payment, nor any partial or entire use or occupancy of the Project by the Owner, shall constitute an acceptance of any Work not in accordance with the Contract Documents.

9.6 PAYMENTS WITHHELD

9.6.1 The Owner shall decline to certify payment and withhold its Certificate in whole or in part, to the extent necessary reasonably to protect itself. If the Owner is unable to certify payment in the amount of the Application, he will notify the Contractor as provided in Subparagraph 9.4.1. If the Contractor and the Owner cannot agree on a revised amount, the Owner will promptly issue a Certificate for Payment for the amount for which it determines is properly due. The Owner may also decline to certify payment or, because of subsequently discovered evidence or subsequent observations, it may nullify the whole or any part of any Certificate for Payment previously issued, to such extent as may be necessary in its opinion to protect itself from loss because of:

(1) defective work not remedied,
(2) third party claims filed or reasonable evidence indicating probable filing of such claims,
(3) failure of the Contractor to make payments properly to Subcontractors or for labor, materials or equipment,
(4) reasonable evidence that the Work cannot be completed for the unpaid balance of the Contract Sum,
(5) damage to the Owner or another Contractor,
(6) reasonable evidence that the Work will not be completed within the Contract Time, or
(7) material failure to carry out the Work in accordance with the Contract Documents.

9.6.2 When the above grounds in Subparagraph 9.6.1 are removed, payment shall be made for amounts withheld because of them.

9.7 FAILURE OF PAYMENT

9.7.1 If the Owner does not issue a Certificate for Payment, through no fault of the Contractor, within ten days after receipt of the Contractor's Application for Payment, then the Contractor may, upon ten additional days' written notice to the Owner, stop the Work until payment of the amount owing has been received. The Contract Sum shall be increased by the amount of the Contractor's reasonable and justifiable costs of shut-down, delay and start-up, which shall be effected by appropriate Change order in accordance with Paragraph 12.3.

9.8 SUBSTANTIAL COMPLETION

9.8.1 When the Contractor considers that the Work, or a designated portion thereof which is acceptable to the Owner, is substantially complete as defined in Subparagraph 8.1.3, the Contractor shall prepare for submission to the Owner a list of items to be completed or corrected. The failure to include any items on such list does not alter the responsibility of the Contractor to complete all Work in accordance with the Contract Documents. When the Owner on the basis of an inspection determines that the Work or designated portion thereof is substantially complete, he will then prepare for a Certificate of Substantial Completion which shall establish the Date of Substantial Completion, shall state the responsibilities of the Owner and the Contractor for security, maintenance, heat, utilities, damage to the Work, and insurance, and shall fix the time within which the Contractor shall complete the items listed therein. Warranties required by the Contract Documents shall commence on the Date of Substantial Completion of the Work or designated portion thereof unless otherwise provided in the Certificate of Substantial Completion shall be submitted to the Owner and the Contractor for their written acceptance of the responsibility assigned to them in such Certificate.

9.8.2 Upon Substantial Completion of the Work or designated portion thereof and upon application by the Contractor and Certification by the Owner, the Owner shall make payment, reflecting adjustment in retainage, if any, for such Work or portion thereof, as provided in the Contract Documents.

9.9 FINAL COMPLETION AND FINAL PAYMENT

9.9.1 Upon receipt of written notice that the Work is ready for final inspection and acceptance and upon receipt of a final Application for Payment, the Owner will promptly make such inspection and, when it finds the Work acceptable under the Contract Documents and the Contract fully performed, it will promptly issue a final Certificate for Payment stating that to the best of its knowledge, information and belief, and on the basis of its observations and inspections, the Work has been completed in accordance with the terms and conditions of the Contract

Documents and that the entire balance found to be due the Contractor, and noted in said final Certificate, is due and payable. The Owner's final Certificate for Payment will constitute a further representation that the conditions precedent to the Contractor's being entitled to final payment as set forth in Subparagraph 9.9.2 have been fulfilled.

9.9.2 Neither the final payment nor the remaining retained percentage shall become due until the Contractor submits to the Owner (1) an affidavit that all payrolls, bills for materials and equipment, and other indebtedness connected with the Work for which the Owner or his property might in any way be responsible, have been fully paid or otherwise satisfied, (2) consent of surety, if any, to final payment and (3), if required by the Owner, other data establishing payment or satisfaction of all such obligations, such as the written document described in Paragraph 13.2.2, receipts, releases and waivers of liens arising out of the Contract, to the extent and in such form as may be designated by the Owner. If any Subcontractor refuses to furnish a release or waiver required by the Owner, the Contractor may furnish a bond satisfactory to the Owner to indemnify him against any such lien. If any such lien remains unsatisfied after all payments are made, the Contractor shall refund to the Owner all moneys that the latter may be compelled to pay in discharging such lien, including all costs and reasonable attorneys' fees.

9.9.3 If, after Substantial Completion of the Work, final completion thereof is delayed for more than ninety (90) days through no fault of the Contractor or by the issuance of Change Orders affecting final completion, the Owner shall, upon application by the Contractor, and without terminating the Contract, make payment of the balance due for that portion of the Work fully completed and accepted, provided that the remaining balance for Work not fully completed or corrected shall not be less than the retainage stipulated in the Contract Documents, and if bonds have been furnished as provided in Paragraph 7.5, the written consent of the surety to the payment of the balance due for that portion of the Work fully completed and accepted shall be submitted by the Contractor to the Owner prior to certification of such payment. Such payment shall be made under the terms and conditions governing final payment, except that it shall not constitute a waiver of claims.

9.9.4 The making of final payment shall constitute a waiver of all claims by the Owner except those arising from:

(1) unsettled liens,
(2) faulty or defective Work appearing after Substantial Completion,
(3) failure of the Work to comply with the requirements of the Contract Documents, or
(4) terms of any special warranties required by the Contract Documents.
(5) obligations under the Performance and Payment Bonds.

9.9.5 The acceptance of final payment shall constitute a waiver of all claims by the Contractor except those previously made in writing and identified by the Contractor as unsettled prior to the time of the final Application for Payment.

ARTICLE 10 - PROTECTION OF PERSONS AND PROPERTY

10.1 SAFETY PRECAUTIONS AND PROGRAMS

10.1.1 The Contractor shall be responsible for initiating, maintaining and supervising all safety precautions and programs in connection with the Work.

10.2 SAFETY OF PERSONS AND PROPERTY

10.2.1 The Contractor shall take all reasonable precautions for the safety of, and shall provide all reasonable protection to prevent damage, injury or loss to:

(1) all employees on the Work and all other persons who may be affected thereby;

(2) all the Work and all materials and equipment to be incorporated therein, whether in storage on or off the site, under the care, custody or control of the Contractor or any of his Subcontractors or Sub-subcontractors; and

(3) other property at the site or adjacent thereto, including trees, shrubs, lawns, walks, pavements, roadways, structures and utilities not designated for removal, relocation or replacement in the course of construction.

10.2.2 The Contractor shall give all notices and comply with all applicable laws, ordinances, rules, regulations and orders of any public authority bearing on the safety of persons or property or their protection from damage, injury or loss.

10.2.3 The Contractor shall erect and maintain, as required by existing conditions and progress of the Work, all reasonable safeguards for safety and protection, including posting danger signs and other warnings against hazards, promulgating safety regulations and notifying owners and users of adjacent utilities.

10.2.4 When the use or storage of explosives or other hazardous materials or equipment is necessary for the execution of the Work, the Contractor shall exercise the utmost care and shall carry on such activities under the supervision of properly qualified personnel.

10.2.5 The Contractor shall promptly remedy all damage or loss to any property referred to in Clauses 10.2.1.2 and 10.2.1.3 caused in whole or in part by the Contractor, any Subcontractor, any Sub-subcontractor, or anyone directly or indirectly employed by any of them, or by anyone for whose acts any of them may be liable and for which the Contractor is responsible under Clauses 10.2.1.2 and 10.2.1.3., except damage or loss solely attributable to the acts or omissions of the Owner, the Engineer or anyone directly or indirectly employed by the Owner or Engineer,

or by anyone for whose acts the Owner or Engineer may be liable, and not attributable to the acts or omissions of the Owner, the Engineer or anyone directly or indirectly employed by them, or by anyone for whose acts it may be liable, and not attributable to the fault or negligence of the Contractor. The foregoing obligations of the Contractor are in addition to his obligation under Paragraph 4.13.

10.2.6 The Contractor shall designate a responsible member of his organization at the site whose duty shall be the prevention of accidents. This person shall be the Contractor's superintendent unless otherwise designated by the Contractor in writing to the Owner.

10.2.7 The Contractor shall not load or permit any part of the Work to be loaded so as to endanger its safety.

10.3 EMERGENCIES

10.3.1 In any emergency affecting the safety of persons or property, the Contractor shall act, at his discretion, to prevent threatened damage, injury or loss. Any additional compensation or extension of time claimed by the Contractor on account of emergency work shall be determined as provided in Article 12 for Changes in the Work.

ARTICLE 11 - INSURANCE

11.1 CONTRACTOR'S LIABILITY INSURANCE

11.1.1 The Contractor shall purchase and maintain such insurance as will protect him and the Owner from claims set forth below which may arise out of or result from the Contractor's operations under the Contract, whether such operations be by himself or by any Subcontractor or by anyone directly or indirectly employed by any of them, or by anyone for whose acts any of them may be liable:

(1) claims under workers' or workmen's compensation, disability benefit and other similar employees benefit acts;

(2) claims for damages because of bodily injury, occupational sickness or disease, or death of his employees;

(3) claims for damages because of bodily injury, sickness or disease, or death of any person other than his employees;

(4) claims for damages insured by usual personal injury liability coverage which are sustained (1) by any person as a result of an offense directly or indirectly related to the employment of such person by the Contractor, or (2) by any other person;

(5) claims for damages, other than to the Work itself, because of injury to or destruction of tangible property, including loss of use resulting therefrom; and

(6) claims for damages because of bodily injury or death of any person or property damage arising out of the ownership, maintenance or use of any motor vehicle.

11.1.2 The insurance required by Subparagraph 11.1.1 shall be written for not less than any limits of liability specified in the Contract Documents, or required by law, whichever is greater.

11.1.3 The insurance required by Subparagraph 11.1.1 shall include contractual liability insurance applicable to the Contractor's obligations under Paragraph 4.18.

11.1.4 Certificates of Insurance acceptable to the Owner shall be filed with the Owner prior to commencement of the Work. These Certificates shall contain a provision that coverages afforded under the policies will not be cancelled until at least thirty days prior written notice has been given to the Owner. Certificates of renewal shall be delivered to the Owner at least fifteen (15) days prior to the expiration date of any insurance policy. The Contractor shall not commence the Work until all insurance required hereunder shall have been obtained and approved by the Owner, and the Contractor shall not permit any Subcontractor or Sub-subcontractor to commence work until all insurance required of them shall have been similarly obtained and approved.

11.2 OWNER'S LIABILITY INSURANCE

11.2.1 The Owner, at its option, may purchase and maintain such insurance as will protect it against claims which may arise from operations under the Contract.

11.3 PROPERTY INSURANCE

11.3.1 The Owner may, at its option, purchase and/or maintain property insurance upon the entire Work at the site to the full insurable value thereof. This insurance shall include the interests of the Owner, the Contractor, Subcontractors and Sub-subcontractors in the Work and shall insure against the perils of fire and extended coverage and shall include "all risk" insurance for physical loss or damage including, without duplication of coverage, theft, vandalism and malicious mischief. If the Owner does not intend to purchase or maintain such insurance for the full insurable value of the entire Work, he shall inform the Contractor in writing prior to commencement of the Work. The Contractor may then effect insurance which will protect the interests of himself, his Subcontractors and the Sub-subcontractors in the Work, and by appropriate Change Order the cost thereof shall be charged to the Owner. If not covered under the all risk insurance or otherwise provided in the Contract Documents, the Contractor shall effect and maintain property insurance on portions of the Work stored off the site or in

transit when such portions of the Work are to be included in an Application for Payment under Subparagraph 9.3.2. This insurance does not cover any tools owned by mechanics, any tools, equipment, scaffolding, staging towers, and other property owned or rented by the Contractor, the capital value of which is not included in the cost of the Work.

11.3.2 The Owner and Contractor waive all rights against (1) each other and the Subcontractors, Sub-subcontractors, agents and employees each of the other, and (2) separate contractors, if any, and their subcontractors, sub-subcontractors, agents and employees, for damages caused by fire or other perils to the extent covered by insurance obtained pursuant to this Paragraph 11.3 or any other property insurance held by the Owner as trustee. The Owner or the Contractor, as appropriate, shall require of separate contractors, Subcontractors and Sub-subcontractors by appropriate agreements, written where legally required for validity, similar waivers each in favor of all other parties enumerated in this Subparagraph 11.3.2.

11.3.3 The Owner as trustee shall have power to adjust and settle any loss with the insurers.

11.3.4 The construction site may be occupied by the Owner during the Work. Insurance shall not lapse or be cancelled on account of this occupancy. The insurance certificates required under this contract shall include this requirement.

11.4 LOSS OF USE INSURANCE

11.4.1 The Owner, at his option, may purchase and maintain such insurance as will insure him against loss of use of his property due to fire or other hazards, however caused.

ARTICLE 12 - CHANGES IN THE WORK

12.1 CHANGE ORDER

12.1.1 A Change Order is a written order to the Contractor signed by the Owner, issued after execution of the Contract, authorizing a change in the Work or an adjustment in the Contract Sum or the Contract Time. The Contract Sum and the Contract Time may be changed only by Change Order.

12.1.2 The Owner, without invalidating the Contract, may order changes in the Work within the general scope of the Contract consisting of additions, deletions or other revisions, the Contract Sum and the Contract Time being adjusted accordingly. All such changes in the Work shall be authorized by Change Order, and shall be performed under the applicable conditions of the Contract Documents.

12.1.3 The cost or credit to the Owner resulting from a change in the Work shall be determined in one or more of the following ways:

(1) by mutual acceptance of a lump sum properly itemized and supported by sufficient substantiating data to permit evaluation;

(2) by unit prices stated in the Contract Documents or subsequently agreed upon;

(3) by cost to be determined in a manner agreed upon by the parties and a mutually acceptable fixed or percentage fee; or

(4) by the method provided in Subparagraph 12.1.4.

12.1.4 If none of the methods set forth in Clauses 12.1.3.1, 12.1.3.2 or 12.1.3.3 is agreed upon, the Contractor, provided he receives a written order signed by the Owner, shall promptly proceed with the Work involved. The cost of such Work shall then be determined by the Owner on the basis of the reasonable expenditures and savings of those performing the Work attributable to the change, including, in the case of an increase in the Contract Sum, a reasonable allowance for overhead and profit. In such case, and also under Clauses 12.1.3.3 and 12.1.3.4 above, the Contractor shall keep and present an itemized accounting together with appropriate supporting data for inclusion in a Change Order. Unless otherwise provided in the Contract Documents, cost shall be equal to the following: (1) the actual cost for direct labor, material (less value of salvage, if any) and use of equipment, plus 10 percent of this total for overhead: (2) plus the actual cost of Workmen's Compensation and Liability Insurance, Health, Welfare and Pension benefits, Social Security deductions, Employment Security Benefits: (3) plus 10 percent of the total of (1) and (2); (4) plus the estimated proportionate cost of surety bonds. For work performed by a Subcontractor, the Contractor shall accept as full payment therefor an amount equal to the cost to the Contractor of such work as determined by the Engineer, plus 10 percent of such cost. Pending final determination of cost to the Owner, payments on account shall be made on the Owner's Certificate for Payment. The amount of credit to be allowed by the Contractor to the Owner for any deletion or change which results in a net decrease in the Contract Sum will be the amount of the actual net cost. When both additions and credits covering related Work or substitutions are involved in any one change, the allowance for overhead and profit shall be figured on the basis of the net increase, if any, with respect to that change.

12.1.5 Unit prices are stated in the Bid Form and the Contract shall include all costs of the Contractor to the Owner as listed in Paragraph 12.1.4. No additional charges shall be allowed for these items under any circumstances.

12.2 CONCEALED CONDITIONS

12.2.1 Should concealed conditions encountered in the performance of the Work below the surface of the ground or should concealed or unknown conditions in an

existing structure be at variance with the conditions indicated by the Contract Documents, or should unknown physical conditions below the surface of the ground or should concealed or unknown conditions in an existing structure of an unusual nature, differing materially from those ordinarily encountered and generally recognized as inherent in work of the character provided for in his Contract, be encountered, the Contract Sum shall be equitably adjusted by Change Order upon claim by either party made within twenty days after the first observance of the conditions.

12.3 CLAIMS FOR ADDITIONAL COST

12.3.1 If the Contractor wishes to make a claim for an increase in the Contract Sum, he shall give the Owner written notice thereof within twenty days after the occurrence of the event giving rise to such claim. This notice shall be given by the Contractor before proceeding to execute the Work, except in an emergency endangering life or property in which case the Contractor shall proceed in accordance with Paragraph 10.3. No such claim shall be valid unless so made. Any change in the Contract Sum resulting from such claim shall be authorized by Change Order.

12.3.2 If the Contractor claims that additional cost is involved because of, but not limited to, (1) any written interpretation by the Owner or Engineer, (2) any order by the Owner to stop the Work pursuant to Paragraph 3.3 where the Contractor was not at fault, (3) any written order for a minor change in the Work issued pursuant to Paragraph 12.4, or (4) failure of payment by the Owner pursuant to Paragraph 9.7, the Contractor shall make such claim as provided in Subparagraph 12.3.1.

12.4 MINOR CHANGES IN THE WORK

12.4.1 The Owner and Engineer will have authority to order minor changes in the Work not involving an adjustment in the Contract Sum or an extension of the Contract Time and not inconsistent with the intent of the Contract Documents. Such changes shall be affected by written order, and shall be binding on the Owner, Engineer and the Contractor. The Contractor shall carry out such written orders promptly.

ARTICLE 13 - UNCOVERING AND CORRECTION OF WORK

13.1 UNCOVERING OF WORK

13.1.1 If any portion of the work should be covered contrary to the request of the Owner or to requirements specifically expressed in the Contract Documents, it must, if required in writing by the Owner, be uncovered for his observation and shall be replaced at the Contractor's expense.

13.1.2 If any other portion of the Work has been covered which the Owner has not specifically requested to observe prior to being covered, the Owner may request to see such Work and it shall be uncovered by the Contractor. If such Work be found in accordance with the Contract Documents, the cost of uncovering and replacement shall, by appropriate Change Order, be charged to the Owner. If such Work be found not in accordance with the Contract Documents, the Contractor shall pay such costs unless it be found that this condition was caused by the Owner or a separate contractor as provided in Article 6, in which event the Owner shall be responsible for the payment of such costs.

13.2 CORRECTION OF WORK

13.2.1 The Contractor shall promptly correct all Work rejected by the Owner or Engineer as defective or as failing to conform to the Contract Documents whether observed before or after Substantial Completion and whether or not fabricated, installed or completed. The Contractor shall bear all costs of correcting such rejected Work, including compensation for the Owner's additional services made necessary thereby.

13.2.2 The Contractor shall provide a document to the Owner certifying that if within one year after the Date of Substantial Completion of the Work or designated portion thereof or within one year after acceptance by the Owner of designated equipment or within such longer period of time as may be prescribed by law or by the terms of any applicable special warranty required by the Contract Documents, any of the Work is found to be defective or requiring excessive service or maintenance or not in accordance with the Contract Documents, the Contractor shall correct it within seven (7) days after receipt of a written notice from the Owner to do so unless the Owner has previously given the Contractor a written acceptance of such approval, which written acceptance shall specifically refer to such defect. This obligation shall survive termination of the Contract. The Owner shall give such notice promptly after discovery of the condition. The provisions of this paragraph are in addition to, and not in limitation of, the Owner's other rights and remedies hereunder and in law and equity.

13.2.3 The Contractor shall remove from the site all portions of the Work which are defective or non-conforming and which have not been corrected under Subparagraph 4.5.1, 13.2.1 and 13.2.2, unless removal is waived by the Owner in writing.

13.2.4 If the Contractor fails to correct defective or nonconforming Work as provided in Subparagraphs 4.3.1, 12.2.1 and 13.2.2. the Owner may correct it in accordance with Paragraph 3.4.

13.2.5 If the Contractor does not proceed with the correction of such defective or non-conforming Work within a reasonable time fixed by written notice from the Owner, the Owner may remove it and may store the materials or equipment at the

expense of the Contractor. If the Contractor does not pay the cost of such removal and storage within ten days thereafter, the Owner may upon ten additional days' written notice sell such Work at auction or at private sale and shall account for the net proceeds thereof, after deducting all the costs that should have been borne by the Contractor, including compensation for the Owner's additional services made necessary thereby. If such proceeds of sale do not cover all costs which the Contractor should have borne, the difference shall be charged to the Contractor and an appropriate Change Order shall be issued. If the payments then or thereafter due the Contractor are not sufficient to cover such amount, the Contractor shall pay the difference to the Owner.

13.2.6 The Contractor shall bear the cost of making good all work of the Owner or separate contractors destroyed or damaged by such correction or removal.

13.2.7 Nothing contained in this Paragraph 13.2 shall be construed to establish a period of limitation with respect to any other obligation which the Contractor might have under the Contract Documents, including Paragraph 4.5 hereof. The establishment of the time period of one year after the Date of Substantial Completion or such longer period of time as may be prescribed by law or by the terms of any warranty required by the Contract Documents relates only to the specific obligation of the Contractor to correct the Work, and has no relationship to the time within which his obligation to comply with the Contract Documents may be sought to be enforced, nor to the time within which proceedings may be commenced to establish the Contractor's liability with respect to his obligation other than specifically to correct the Work.

13.3 ACCEPTANCE OF DEFECTIVE OR NON-CONFORMING WORK

13.3.1 If the Owner prefers to accept defective or nonconforming Work, he may do so instead of requiring its removal and correction, in which case a Change Order will be issued to reflect a reduction in the Contract Sum where appropriate and equitable. Such adjustment shall be effected whether or not final payment has been made.

ARTICLE 14 - TERMINATION OF THE CONTRACT

14.1 TERMINATION BY THE CONTRACTOR

14.1.1 If the Work is stopped for a period of ninety (90) days under an order of any court or other public authority having jurisdiction, or as a result of an act of government, such as a decision of a national emergency making materials unavailable, through no act or fault of the Contractor or a Subcontractor or their agents or employees or any other persons performing any of the Work under a contract with the Contractor, or if the Work should be stopped for a period of thirty days by the Contractor because the Owner has not issued a Certificate for Payment as provided in Paragraph 9.7 or because the Owner unjustifiably has not

made payment thereon as provided in Paragraph 9.7, then the Contractor may, upon seven additional days written notice to the Owner, terminate the Contract and recover from the Owner payment for all Work executed and for any proven loss sustained upon any materials, equipment, tools, construction equipment and machinery, including reasonable profit and damages.

14.2 TERMINATION BY THE OWNER

14.2.1 To the extent permitted by law, if the Contractor is adjudged a bankrupt, or if he makes a general assignment for the benefit of his creditors, or if a receiver is appointed on account of his insolvency, or if he refuses or fails, repeatedly except in cases for which extension of time is provided, to supply enough properly skilled workmen or proper materials, or if he fails to make prompt proper payment to Subcontractors for materials or labor, or disregards laws, ordinances, rules, regulations or order of any public authority having jurisdiction, or otherwise fails to comply with any provision of the Contract Documents, then the Owner may, without prejudice to any right or remedy and after giving the Contractor and his surety, if any, seven days' written notice, terminate the employment of the Contractor and take possession of the site and of all materials, equipment, tools, construction equipment and machinery thereon owned by the Contractor and may finish the Work by whatever method he may deem expedient.

14.2.2 If the unpaid balance of the Contract Sum exceeds the costs of finishing the Work, including compensation for the Owner's additional services made necessary thereby, such excess shall be paid to the Contractor. If such costs exceed the unpaid balance, the Contractor shall pay the difference to the Owner. The obligation to pay said amount to the Contractor or to the Owner, as the case may be, shall survive the termination of the Contract.

SECTION 00800

SUPPLEMENTAL GENERAL CONDITIONS

		Page
1.	Introduction	2
2.	Labor Classifications and Prevailing Wage Rates	2
3.	Insurance Requirements	2
4.	Equal Employment Opportunity/ Affirmative Action Requirements	3

Attachment A - Wage Rates and Certificate of Compliance

Attachment B - (MBE/EEO/AA) Policies

2. Commonwealth of Massachusetts

Attachment C – Monthly Price Adjustments

4. Document 00811 – Hot Mix Asphalt Mixtures
5. Document 00812 – Diesel Fuel and Gasoline
6. Document 00814 – Portland Cement Concrete Mixes

Attachment D - Town of Dedham Design and Construction Standards

Attachment E - Massachusetts Highway Department Wheel Chair Ramp Standards

1. INTRODUCTION

The following supplements modify, change, delete from or add to Section 00700 GENERAL CONDITIONS. Where any Subsection of the General Conditions is modified or any Paragraph, Subparagraph or Clause thereof is modified or deleted by these Supplemental General Conditions, the unaltered provisions of that Article, Paragraph, Subparagraph or Clause shall remain in effect.

2. In accordance with General Laws Chapter 149, Section 26 through 27D, the Contractor is obligated to comply with the prevailing wage rates established by the Commission of the Department of Labor and Industries for mechanics, apprentices, chauffeurs, teamsters and laborers employed on the Project. The schedule of applicable prevailing wage rates for the Project, together with a Certificate of Compliance therewith, are set forth in Attachment A herein.

3. The Insurance provisions of Article II of The General Conditions are amended by adding the following requirements:

The Contractor shall carry and continuously maintain until completion of the Contract, insurance as specified below and in such form as shall protect him performing work covered by this Contract, or the Town of Dedham and its employees, agents and officials, from all claims and liability for damages for bodily injury, including accidental death, and for property damage, which may arise from operations under this Contract. The Contractor covenants and agrees to hold the Town and its employees, agents and officials harmless from loss or damage due to claims for personal injury and/or property damage arising from, or in connection with operations under this Contract.

Except as otherwise stated, the amounts of such insurance shall be for each policy, not less than:

(A) For liability for bodily injury, including accidental death, $1,000,000 for any one person and $1,000,000 on account of one occurrence and $1,000,000 Aggregate Limit.

(B) For liability for property damage $1,000,000 on account of any one occurrence and $1,000,000 Aggregate Limit. Extra-territorial clause shall be included.

1.) Worker's Compensation insurance as required by the General Laws of the Commonwealth of Massachusetts.

2.) Bodily Injury Premise-Operations, Contractor's Protective and Completed Operations Public Liability Insurance in the amounts required in (A) above.

3.) Property Damage Premises-Operations, Contractor's Protective and Completed Operations Public Liability Insurance in the amounts required in (B) above.

4.) Bodily Injury Liability Insurance covering the operation of all motor vehicles owned by the Contractor and vehicles not owned by the Contractor, while such vehicles are being operated in connection with the prosecution of the work under this Contract, in the amounts required in (A) above.

5.) Property Damage Liability Insurance covering the operation of all motor vehicles owned by the Contractor and vehicles not owned by the Contractor while such vehicles are being operated in connection with prosecution of the work under this Contract, in the amounts required in (B) above.

6.) Contractual Liability Insurance covering the liability assumed by the Contractor in the amounts required under (A) and (B) above.

7.) Owner's Protective Insurance secured by the Contractor on behalf of the Town of Dedham which will directly protect the Town and/or its employees, agents and officers from liability for bodily injuries, including accident death, in the amounts required in (A) above, and for property damage in the amounts required in (B) above.

All policies shall be so written that the Owner will be notified of cancellation or restrictive amendment at least fifteen (15) days prior to the effective date of such cancellation or amendment. A certificate from the Contractor's Insurance Carrier showing at least the coverage and limits of liability specified above and expiration date shall be filed with the Owner before operations are begun.

Such certificates shall not merely name the types of policy provided, but shall specifically refer to this Contract and shall state that such insurance is required by this Contract. The Contractor shall make no claims against the Town of Dedham or its officers for any injury to any of his officers or employees or for damage to his trucks or equipment arising out of work contemplated by this Contract.

4. <u>Modified Supplemental Equal Employment Opportunity Anti-Discrimination and Affirmative Action Program and the Special Provisions for Participation by Minority and Women Business Enterprises.</u>

The Contractor shall abide by the Commonwealth of Massachusetts' Modified Supplemental Equal Employment Opportunity Anti-Discrimination and Affirmative Action Program and the Special Provisions of Participation by Minority and Women Business Enterprises, (the Program is attached in its entirety as (Attachment B.1)), as well as with all other applicable Federal, State and Local equal employment opportunity, affirmative action, minority/women's business enterprise laws, rules, regulations and policies. (See Attachment B.2).

ATTACHMENT A - WAGE RATES AND CERTIFICATE OF COMPLIANCE

THE COMMONWEALTH OF MASSACHUSETTS
EXECUTIVE OFFICE OF LABOR AND WORKFORCE DEVELOPMENT
DEPARTMENT OF LABOR STANDARDS

Prevailing Wage Rates

As determined by the Director under the provisions of the Massachusetts General Laws, Chapter 149, Sections 26 to 27H

CHARLES D. BAKER
Governor

KARYN E. POLITO
Lt. Governor

RONALD L. WALKER, II
Secretary

HEATHER E. ROWE
Director

Awarding Authority: Town of Dedham

Contract Number:

City/Town: DEDHAM

Description of Work: Work consists of various forms of asphalt paving and resurfacing including but not limited to; reclamation, grading and compaction, milling and paving.

Job Location: Various Locations

Information about Prevailing Wage Schedules for Awarding Authorities and Contractors

- This wage schedule applies only to the specific project referenced at the top of this page and uniquely identified by the "Wage Request Number" on all pages of this schedule.
- An Awarding Authority must request an updated wage schedule from the Department of Labor Standards ("DLS") if it has not opened bids or selected a contractor within 90 days of the date of issuance of the wage schedule. For CM AT RISK projects (bid pursuant to G.L. c.149A), the earlier of: (a) the execution date of the GMP Amendment, or (b) the bid for the first construction scope of work must be within 90-days of the wage schedule issuance date.
- The wage schedule shall be incorporated in any advertisement or call for bids for the project as required by M.G.L. c. 149, § 27. The wage schedule shall be made a part of the contract awarded for the project. The wage schedule must be posted in a conspicuous place at the work site for the life of the project in accordance with M.G.L. c. 149 § 27. The wages listed on the wage schedule must be paid to employees performing construction work on the project whether they are employed by the prime contractor, a filed sub-bidder, or any sub-contractor.
- All apprentices working on the project are required to be registered with the Massachusetts Division of Apprentice Standards (DAS). Apprentice must keep his/her apprentice identification card on his/her person during all work hours on the project. An apprentice registered with DAS may be paid the lower apprentice wage rate at the applicable step as provided on the prevailing wage schedule. **If an apprentice rate is not listed on the prevailing wage schedule for the trade in which an apprentice is registered with the DAS, the apprentice must be paid the journeyworker's rate for the trade.**
- The wage rates will remain in effect for the duration of the project, except in the case of multi-year public construction projects. For construction projects lasting longer than one year, awarding authorities must request an updated wage schedule. Awarding authorities are required to request these updates no later than two weeks before the anniversary of the date the contract was executed by the awarding authority and the general contractor. For multi-year CM AT RISK projects, awarding authority must request an annual update no later than two weeks before the anniversary date, determined as the earlier of: (a) the execution date of the GMP Amendment, or (b) the execution date of the first amendment to permit procurement of construction services. Contractors are required to obtain the wage schedules from awarding authorities, and to pay no less than these rates to covered workers. The annual update requirement is not applicable to 27F "rental of equipment" contracts.
- Every contractor or subcontractor which performs construction work on the project is required to submit weekly payroll reports and a Statement of Compliance directly to the awarding authority by mail or email and keep them on file for three years. Each weekly payroll report must contain: the employee's name, address, occupational classification, hours worked, and wages paid. Do not submit weekly payroll reports to DLS. A sample of a payroll reporting form may be obtained at http://www.mass.gov/dols/pw.
- Contractors with questions about the wage rates or classifications included on the wage schedule have an affirmative obligation to inquire with DLS at (617) 626-6953.
- Employees not receiving the prevailing wage rate set forth on the wage schedule may report the violation to the Fair Labor Division of the office of the Attorney General at (617) 727-3465.
- Failure of a contractor or subcontractor to pay the prevailing wage rates listed on the wage schedule to all employees who perform construction work on the project is a violation of the law and subjects the contractor or subcontractor to civil and criminal penalties.

Issue Date: 02/24/2015 **Wage Request Number:** 20150224-029

Classification	Effective Date	Base Wage	Health	Pension	Supplemental Unemployment	Total Rate
Construction						
(2 AXLE) DRIVER - EQUIPMENT *TEAMSTERS JOINT COUNCIL NO. 10 ZONE A*	12/01/2014	$32.40	$9.91	$9.33	$0.00	$51.64
	06/01/2015	$32.75	$9.91	$9.33	$0.00	$51.99
	08/01/2015	$32.75	$10.41	$9.33	$0.00	$52.49
	12/01/2015	$32.75	$10.41	$10.08	$0.00	$53.24
	06/01/2016	$33.25	$10.41	$10.08	$0.00	$53.74
	08/01/2016	$33.25	$10.91	$10.08	$0.00	$54.24
	12/01/2016	$33.25	$10.91	$10.89	$0.00	$55.05
(3 AXLE) DRIVER - EQUIPMENT *TEAMSTERS JOINT COUNCIL NO. 10 ZONE A*	12/01/2014	$32.47	$9.91	$9.33	$0.00	$51.71
	06/01/2015	$32.82	$9.91	$9.33	$0.00	$52.06
	08/01/2015	$32.82	$10.41	$9.33	$0.00	$52.56
	12/01/2015	$32.82	$10.41	$10.08	$0.00	$53.31
	06/01/2016	$33.32	$10.41	$10.08	$0.00	$53.81
	08/01/2016	$33.32	$10.91	$10.08	$0.00	$54.31
	12/01/2016	$33.32	$10.91	$10.89	$0.00	$55.12
(4 & 5 AXLE) DRIVER - EQUIPMENT *TEAMSTERS JOINT COUNCIL NO. 10 ZONE A*	12/01/2014	$32.59	$9.91	$9.33	$0.00	$51.83
	06/01/2015	$32.94	$9.91	$9.33	$0.00	$52.18
	08/01/2015	$32.94	$10.41	$9.33	$0.00	$52.68
	12/01/2015	$32.94	$10.41	$10.08	$0.00	$53.43
	06/01/2016	$33.44	$10.41	$10.08	$0.00	$53.93
	08/01/2016	$33.44	$10.91	$10.08	$0.00	$54.43
	12/01/2016	$33.44	$10.91	$10.89	$0.00	$55.24
ADS/SUBMERSIBLE PILOT *PILE DRIVER LOCAL 56 (ZONE 1)*	08/01/2014	$87.36	$9.80	$18.17	$0.00	$115.33
	08/01/2015	$90.51	$9.80	$18.17	$0.00	$118.48
AIR TRACK OPERATOR *LABORERS - ZONE 1*	12/01/2014	$35.35	$7.30	$12.95	$0.00	$55.60
	06/01/2015	$36.10	$7.30	$12.95	$0.00	$56.35
	12/01/2015	$36.85	$7.30	$12.95	$0.00	$57.10
	06/01/2016	$37.60	$7.30	$12.95	$0.00	$57.85
	12/01/2016	$38.60	$7.30	$12.95	$0.00	$58.85
For apprentice rates see "Apprentice- LABORER"						
ASBESTOS REMOVER - PIPE / MECH. EQUIPT. *HEAT & FROST INSULATORS LOCAL 6 (BOSTON)*	12/01/2014	$32.48	$10.40	$5.95	$0.00	$48.83
	06/01/2015	$33.43	$10.40	$5.95	$0.00	$49.78
	12/01/2015	$34.38	$10.40	$5.95	$0.00	$50.73
ASPHALT RAKER *LABORERS - ZONE 1*	12/01/2014	$34.85	$7.30	$12.95	$0.00	$55.10
	06/01/2015	$35.60	$7.30	$12.95	$0.00	$55.85
	12/01/2015	$36.35	$7.30	$12.95	$0.00	$56.60
	06/01/2016	$37.10	$7.30	$12.95	$0.00	$57.35
	12/01/2016	$38.10	$7.30	$12.95	$0.00	$58.35
For apprentice rates see "Apprentice- LABORER"						
ASPHALT/CONCRETE/CRUSHER PLANT-ON SITE *OPERATING ENGINEERS LOCAL 4*	12/01/2014	$42.39	$10.00	$14.30	$0.00	$66.69
	06/01/2015	$43.14	$10.00	$14.30	$0.00	$67.44
	12/01/2015	$44.39	$10.00	$14.30	$0.00	$68.69
	06/01/2016	$45.14	$10.00	$14.30	$0.00	$69.44
	12/01/2016	$46.39	$10.00	$14.30	$0.00	$70.69
	06/01/2017	$47.39	$10.00	$14.30	$0.00	$71.69
	12/01/2017	$48.39	$10.00	$14.30	$0.00	$72.69

Classification	Effective Date	Base Wage	Health	Pension	Supplemental Unemployment	Total Rate
For apprentice rates see "Apprentice- OPERATING ENGINEERS"						
BACKHOE/FRONT-END LOADER *OPERATING ENGINEERS LOCAL 4*	12/01/2014	$42.39	$10.00	$14.30	$0.00	$66.69
	06/01/2015	$43.14	$10.00	$14.30	$0.00	$67.44
	12/01/2015	$44.39	$10.00	$14.30	$0.00	$68.69
	06/01/2016	$45.14	$10.00	$14.30	$0.00	$69.44
	12/01/2016	$46.39	$10.00	$14.30	$0.00	$70.69
	06/01/2017	$47.39	$10.00	$14.30	$0.00	$71.69
	12/01/2017	$48.39	$10.00	$14.30	$0.00	$72.69
For apprentice rates see "Apprentice- OPERATING ENGINEERS"						
BARCO-TYPE JUMPING TAMPER *LABORERS - ZONE 1*	12/01/2014	$34.85	$7.30	$12.95	$0.00	$55.10
	06/01/2015	$35.60	$7.30	$12.95	$0.00	$55.85
	12/01/2015	$36.35	$7.30	$12.95	$0.00	$56.60
	06/01/2016	$37.10	$7.30	$12.95	$0.00	$57.35
	12/01/2016	$38.10	$7.30	$12.95	$0.00	$58.35
For apprentice rates see "Apprentice- LABORER"						
BLOCK PAVER, RAMMER / CURB SETTER *LABORERS - ZONE 1*	12/01/2014	$35.35	$7.30	$12.95	$0.00	$55.60
	06/01/2015	$36.10	$7.30	$12.95	$0.00	$56.35
	12/01/2015	$36.85	$7.30	$12.95	$0.00	$57.10
	06/01/2016	$37.60	$7.30	$12.95	$0.00	$57.85
	12/01/2016	$38.60	$7.30	$12.95	$0.00	$58.85
For apprentice rates see "Apprentice- LABORER"						
BOILER MAKER *BOILERMAKERS LOCAL 29*	01/01/2010	$37.70	$6.97	$11.18	$0.00	$55.85

Apprentice - *BOILERMAKER - Local 29*

Effective Date - 01/01/2010

Step	percent	Apprentice Base Wage	Health	Pension	Supplemental Unemployment	Total Rate
1	65	$24.51	$6.97	$11.18	$0.00	$42.66
2	65	$24.51	$6.97	$11.18	$0.00	$42.66
3	70	$26.39	$6.97	$11.18	$0.00	$44.54
4	75	$28.28	$6.97	$11.18	$0.00	$46.43
5	80	$30.16	$6.97	$11.18	$0.00	$48.31
6	85	$32.05	$6.97	$11.18	$0.00	$50.20
7	90	$33.93	$6.97	$11.18	$0.00	$52.08
8	95	$35.82	$6.97	$11.18	$0.00	$53.97

Notes:

Apprentice to Journeyworker Ratio:1:5

BRICK/STONE/ARTIFICIAL MASONRY (INCL. MASONRY WATERPROOFING) *BRICKLAYERS LOCAL 3 (FOXBORO)*	09/01/2014	$46.86	$10.18	$17.62	$0.00	$74.66
	03/01/2015	$46.86	$10.18	$17.90	$0.00	$74.94
	09/01/2015	$47.76	$10.18	$17.97	$0.00	$75.91
	03/01/2016	$48.33	$10.18	$17.97	$0.00	$76.48
	09/01/2016	$49.23	$10.18	$18.05	$0.00	$77.46
	03/01/2017	$49.80	$10.18	$18.05	$0.00	$78.03

Classification	Effective Date	Base Wage	Health	Pension	Supplemental Unemployment	Total Rate

Apprentice - *BRICK/PLASTER/CEMENT MASON - Local 3 Foxboro*

Effective Date - 09/01/2014

Step	percent	Apprentice Base Wage	Health	Pension	Supplemental Unemployment	Total Rate
1	50	$23.43	$10.18	$17.62	$0.00	$51.23
2	60	$28.12	$10.18	$17.62	$0.00	$55.92
3	70	$32.80	$10.18	$17.62	$0.00	$60.60
4	80	$37.49	$10.18	$17.62	$0.00	$65.29
5	90	$42.17	$10.18	$17.62	$0.00	$69.97

Effective Date - 03/01/2015

Step	percent	Apprentice Base Wage	Health	Pension	Supplemental Unemployment	Total Rate
1	50	$23.43	$10.18	$17.90	$0.00	$51.51
2	60	$28.12	$10.18	$17.90	$0.00	$56.20
3	70	$32.80	$10.18	$17.90	$0.00	$60.88
4	80	$37.49	$10.18	$17.90	$0.00	$65.57
5	90	$42.17	$10.18	$17.90	$0.00	$70.25

Notes:

Apprentice to Journeyworker Ratio:1:5

BULLDOZER/GRADER/SCRAPER *OPERATING ENGINEERS LOCAL 4*	12/01/2014	$41.99	$10.00	$14.30	$0.00	$66.29
	06/01/2015	$42.73	$10.00	$14.30	$0.00	$67.03
	12/01/2015	$43.97	$10.00	$14.30	$0.00	$68.27
	06/01/2016	$44.72	$10.00	$14.30	$0.00	$69.02
	12/01/2016	$45.95	$10.00	$14.30	$0.00	$70.25
	06/01/2017	$46.94	$10.00	$14.30	$0.00	$71.24
	12/01/2017	$47.93	$10.00	$14.30	$0.00	$72.23
For apprentice rates see "Apprentice- OPERATING ENGINEERS"						
CAISSON & UNDERPINNING BOTTOM MAN *LABORERS - FOUNDATION AND MARINE*	12/01/2014	$35.70	$7.30	$13.15	$0.00	$56.15
	06/01/2015	$36.45	$7.30	$13.15	$0.00	$56.90
	12/01/2015	$37.20	$7.30	$13.15	$0.00	$57.65
	06/01/2016	$37.95	$7.30	$13.15	$0.00	$58.40
	12/01/2016	$38.95	$7.30	$13.15	$0.00	$59.40
For apprentice rates see "Apprentice- LABORER"						
CAISSON & UNDERPINNING LABORER *LABORERS - FOUNDATION AND MARINE*	12/01/2014	$34.55	$7.30	$13.15	$0.00	$55.00
	06/01/2015	$35.30	$7.30	$13.15	$0.00	$55.75
	12/01/2015	$36.05	$7.30	$13.15	$0.00	$56.50
	06/01/2016	$36.80	$7.30	$13.15	$0.00	$57.25
	12/01/2016	$37.80	$7.30	$13.15	$0.00	$58.25
For apprentice rates see "Apprentice- LABORER"						

Classification	Effective Date	Base Wage	Health	Pension	Supplemental Unemployment	Total Rate
CAISSON & UNDERPINNING TOP MAN *LABORERS - FOUNDATION AND MARINE*	12/01/2014	$34.55	$7.30	$13.15	$0.00	$55.00
	06/01/2015	$35.30	$7.30	$13.15	$0.00	$55.75
	12/01/2015	$36.05	$7.30	$13.15	$0.00	$56.50
	06/01/2016	$36.80	$7.30	$13.15	$0.00	$57.25
	12/01/2016	$37.80	$7.30	$13.15	$0.00	$58.25
For apprentice rates see "Apprentice- LABORER"						
CARBIDE CORE DRILL OPERATOR *LABORERS - ZONE 1*	12/01/2014	$34.85	$7.30	$12.95	$0.00	$55.10
	06/01/2015	$35.60	$7.30	$12.95	$0.00	$55.85
	12/01/2015	$36.35	$7.30	$12.95	$0.00	$56.60
	06/01/2016	$37.10	$7.30	$12.95	$0.00	$57.35
	12/01/2016	$38.10	$7.30	$12.95	$0.00	$58.35
For apprentice rates see "Apprentice- LABORER"						
CARPENTER *CARPENTERS -ZONE 1 (Metro Boston)*	09/01/2014	$41.65	$9.80	$16.11	$0.00	$67.56
	03/01/2015	$42.67	$9.80	$16.11	$0.00	$68.58

Apprentice - *CARPENTER - Zone 1 Metro Boston*

Effective Date - 09/01/2014

Step	percent	Apprentice Base Wage	Health	Pension	Supplemental Unemployment	Total Rate
1	50	$20.83	$9.80	$1.57	$0.00	$32.20
2	60	$24.99	$9.80	$1.57	$0.00	$36.36
3	70	$29.16	$9.80	$11.40	$0.00	$50.36
4	75	$31.24	$9.80	$11.40	$0.00	$52.44
5	80	$33.32	$9.80	$12.97	$0.00	$56.09
6	80	$33.32	$9.80	$12.97	$0.00	$56.09
7	90	$37.49	$9.80	$14.54	$0.00	$61.83
8	90	$37.49	$9.80	$14.54	$0.00	$61.83

Effective Date - 03/01/2015

Step	percent	Apprentice Base Wage	Health	Pension	Supplemental Unemployment	Total Rate
1	50	$21.34	$9.80	$1.57	$0.00	$32.71
2	60	$25.60	$9.80	$1.57	$0.00	$36.97
3	70	$29.87	$9.80	$11.40	$0.00	$51.07
4	75	$32.00	$9.80	$11.40	$0.00	$53.20
5	80	$34.14	$9.80	$12.97	$0.00	$56.91
6	80	$34.14	$9.80	$12.97	$0.00	$56.91
7	90	$38.40	$9.80	$14.54	$0.00	$62.74
8	90	$38.40	$9.80	$14.54	$0.00	$62.74

Notes:

Apprentice to Journeyworker Ratio:1:5

CEMENT MASONRY/PLASTERING *BRICKLAYERS LOCAL 3 (FOXBORO)*	01/01/2015	$39.86	$10.90	$18.71	$1.30	$70.77
	07/01/2015	$40.81	$10.90	$18.71	$1.30	$71.72
	01/01/2016	$41.51	$10.90	$18.71	$1.30	$72.42

Classification	Effective Date	Base Wage	Health	Pension	Supplemental Unemployment	Total Rate

Apprentice - *CEMENT MASONRY/PLASTERING - Foxboro*

Effective Date - 01/01/2015

Step	percent	Apprentice Base Wage	Health	Pension	Supplemental Unemployment	Total Rate
1	50	$19.93	$10.90	$12.21	$1.30	$44.34
2	60	$23.92	$10.90	$13.71	$1.30	$49.83
3	65	$25.91	$10.90	$14.71	$1.30	$52.82
4	70	$27.90	$10.90	$15.71	$1.30	$55.81
5	75	$29.90	$10.90	$16.71	$1.30	$58.81
6	80	$31.89	$10.90	$17.71	$1.30	$61.80
7	90	$35.87	$10.90	$18.71	$1.30	$66.78

Effective Date - 07/01/2015

Step	percent	Apprentice Base Wage	Health	Pension	Supplemental Unemployment	Total Rate
1	50	$20.41	$10.90	$12.21	$1.30	$44.82
2	60	$24.49	$10.90	$13.71	$1.30	$50.40
3	65	$26.53	$10.90	$14.71	$1.30	$53.44
4	70	$28.57	$10.90	$15.71	$1.30	$56.48
5	75	$30.61	$10.90	$16.71	$1.30	$59.52
6	80	$32.65	$10.90	$17.71	$1.30	$62.56
7	90	$36.73	$10.90	$18.71	$1.30	$67.64

Notes:

Steps 3,4 are 500 hrs. All other steps are 1,000 hrs.

Apprentice to Journeyworker Ratio:1:3

CHAIN SAW OPERATOR *LABORERS - ZONE 1*	12/01/2014	$34.85	$7.30	$12.95	$0.00	$55.10
	06/01/2015	$35.60	$7.30	$12.95	$0.00	$55.85
	12/01/2015	$36.35	$7.30	$12.95	$0.00	$56.60
	06/01/2016	$37.10	$7.30	$12.95	$0.00	$57.35
	12/01/2016	$38.10	$7.30	$12.95	$0.00	$58.35

For apprentice rates see "Apprentice- LABORER"

CLAM SHELLS/SLURRY BUCKETS/HEADING MACHINES *OPERATING ENGINEERS LOCAL 4*	12/01/2014	$43.39	$10.00	$14.30	$0.00	$67.69
	06/01/2015	$44.14	$10.00	$14.30	$0.00	$68.44
	12/01/2015	$45.39	$10.00	$14.30	$0.00	$69.69
	06/01/2016	$46.14	$10.00	$14.30	$0.00	$70.44
	12/01/2016	$47.39	$10.00	$14.30	$0.00	$71.69
	06/01/2017	$48.39	$10.00	$14.30	$0.00	$72.69
	12/01/2017	$49.39	$10.00	$14.30	$0.00	$73.69

For apprentice rates see "Apprentice- OPERATING ENGINEERS"

Classification	Effective Date	Base Wage	Health	Pension	Supplemental Unemployment	Total Rate
COMPRESSOR OPERATOR *OPERATING ENGINEERS LOCAL 4*	12/01/2014	$29.40	$10.00	$14.30	$0.00	$53.70
	06/01/2015	$29.92	$10.00	$14.30	$0.00	$54.22
	12/01/2015	$30.79	$10.00	$14.30	$0.00	$55.09
	06/01/2016	$31.31	$10.00	$14.30	$0.00	$55.61
	12/01/2016	$32.18	$10.00	$14.30	$0.00	$56.48
	06/01/2017	$32.87	$10.00	$14.30	$0.00	$57.17
	12/01/2017	$33.56	$10.00	$14.30	$0.00	$57.86
For apprentice rates see "Apprentice- OPERATING ENGINEERS"						
DELEADER (BRIDGE) *PAINTERS LOCAL 35 - ZONE 1*	01/01/2015	$47.66	$7.85	$16.10	$0.00	$71.61
	07/01/2015	$48.56	$7.85	$16.10	$0.00	$72.51
	01/01/2016	$49.51	$7.85	$16.10	$0.00	$73.46
	07/01/2016	$50.46	$7.85	$16.10	$0.00	$74.41
	01/01/2017	$51.41	$7.85	$16.10	$0.00	$75.36

Apprentice - *PAINTER Local 35 - BRIDGES/TANKS*

Effective Date - 01/01/2015

Step	percent	Apprentice Base Wage	Health	Pension	Supplemental Unemployment	Total Rate
1	50	$23.83	$7.85	$0.00	$0.00	$31.68
2	55	$26.21	$7.85	$3.66	$0.00	$37.72
3	60	$28.60	$7.85	$3.99	$0.00	$40.44
4	65	$30.98	$7.85	$4.32	$0.00	$43.15
5	70	$33.36	$7.85	$14.11	$0.00	$55.32
6	75	$35.75	$7.85	$14.44	$0.00	$58.04
7	80	$38.13	$7.85	$14.77	$0.00	$60.75
8	90	$42.89	$7.85	$15.44	$0.00	$66.18

Effective Date - 07/01/2015

Step	percent	Apprentice Base Wage	Health	Pension	Supplemental Unemployment	Total Rate
1	50	$24.28	$7.85	$0.00	$0.00	$32.13
2	55	$26.71	$7.85	$3.66	$0.00	$38.22
3	60	$29.14	$7.85	$3.99	$0.00	$40.98
4	65	$31.56	$7.85	$4.32	$0.00	$43.73
5	70	$33.99	$7.85	$14.11	$0.00	$55.95
6	75	$36.42	$7.85	$14.44	$0.00	$58.71
7	80	$38.85	$7.85	$14.77	$0.00	$61.47
8	90	$43.70	$7.85	$15.44	$0.00	$66.99

Notes:

Steps are 750 hrs.

Apprentice to Journeyworker Ratio:1:1

DEMO: ADZEMAN *LABORERS - ZONE 1*	12/01/2014	$34.75	$7.30	$12.95	$0.00	$55.00
	06/01/2015	$35.50	$7.30	$12.95	$0.00	$55.75
	12/01/2015	$36.25	$7.30	$12.95	$0.00	$56.50
For apprentice rates see "Apprentice- LABORER"						

Classification	Effective Date	Base Wage	Health	Pension	Supplemental Unemployment	Total Rate
DEMO: BACKHOE/LOADER/HAMMER OPERATOR *LABORERS - ZONE 1*	12/01/2014	$35.75	$7.30	$12.95	$0.00	$56.00
	06/01/2015	$36.50	$7.30	$12.95	$0.00	$56.75
	12/01/2015	$37.25	$7.30	$12.95	$0.00	$57.50
For apprentice rates see "Apprentice- LABORER"						
DEMO: BURNERS *LABORERS - ZONE 1*	12/01/2014	$35.50	$7.30	$12.95	$0.00	$55.75
	06/01/2015	$36.25	$7.30	$12.95	$0.00	$56.50
	12/01/2015	$37.00	$7.30	$12.95	$0.00	$57.25
For apprentice rates see "Apprentice- LABORER"						
DEMO: CONCRETE CUTTER/SAWYER *LABORERS - ZONE 1*	12/01/2014	$35.75	$7.30	$12.95	$0.00	$56.00
	06/01/2015	$36.50	$7.30	$12.95	$0.00	$56.75
	12/01/2015	$37.25	$7.30	$12.95	$0.00	$57.50
For apprentice rates see "Apprentice- LABORER"						
DEMO: JACKHAMMER OPERATOR *LABORERS - ZONE 1*	12/01/2014	$35.50	$7.30	$12.95	$0.00	$55.75
	06/01/2015	$36.25	$7.30	$12.95	$0.00	$56.50
	12/01/2015	$37.00	$7.30	$12.95	$0.00	$57.25
For apprentice rates see "Apprentice- LABORER"						
DEMO: WRECKING LABORER *LABORERS - ZONE 1*	12/01/2014	$34.75	$7.30	$12.95	$0.00	$55.00
	06/01/2015	$35.50	$7.30	$12.95	$0.00	$55.75
	12/01/2015	$36.25	$7.30	$12.95	$0.00	$56.50
For apprentice rates see "Apprentice- LABORER"						
DIRECTIONAL DRILL MACHINE OPERATOR *OPERATING ENGINEERS LOCAL 4*	12/01/2014	$41.99	$10.00	$14.30	$0.00	$66.29
	06/01/2015	$42.73	$10.00	$14.30	$0.00	$67.03
	12/01/2015	$43.97	$10.00	$14.30	$0.00	$68.27
	06/01/2016	$44.72	$10.00	$14.30	$0.00	$69.02
	12/01/2016	$45.95	$10.00	$14.30	$0.00	$70.25
	06/01/2017	$46.94	$10.00	$14.30	$0.00	$71.24
	12/01/2017	$47.93	$10.00	$14.30	$0.00	$72.23
For apprentice rates see "Apprentice- OPERATING ENGINEERS"						
DIVER *PILE DRIVER LOCAL 56 (ZONE 1)*	08/01/2014	$58.24	$9.80	$18.17	$0.00	$86.21
	08/01/2015	$60.34	$9.80	$18.17	$0.00	$88.31
DIVER TENDER *PILE DRIVER LOCAL 56 (ZONE 1)*	08/01/2014	$41.60	$9.80	$18.17	$0.00	$69.57
	08/01/2015	$43.10	$9.80	$18.17	$0.00	$71.07
DIVER TENDER (EFFLUENT) *PILE DRIVER LOCAL 56 (ZONE 1)*	08/01/2014	$62.40	$9.80	$18.17	$0.00	$90.37
	08/01/2015	$64.65	$9.80	$18.17	$0.00	$92.62
DIVER/SLURRY (EFFLUENT) *PILE DRIVER LOCAL 56 (ZONE 1)*	08/01/2014	$87.36	$9.80	$18.17	$0.00	$115.33
	08/01/2015	$90.51	$9.80	$18.17	$0.00	$118.48
DRAWBRIDGE OPERATOR (Construction) *ELECTRICIANS LOCAL 103*	09/01/2014	$44.79	$13.00	$15.04	$0.00	$72.83
	03/01/2015	$45.17	$13.00	$15.40	$0.00	$73.57
	09/01/2015	$46.13	$13.00	$15.43	$0.00	$74.56
	03/01/2016	$47.08	$13.00	$15.46	$0.00	$75.54
For apprentice rates see "Apprentice- ELECTRICIAN"						
ELECTRICIAN *ELECTRICIANS LOCAL 103*	09/01/2014	$44.79	$13.00	$15.04	$0.00	$72.83
	03/01/2015	$45.17	$13.00	$15.40	$0.00	$73.57
	09/01/2015	$46.13	$13.00	$15.43	$0.00	$74.56
	03/01/2016	$47.08	$13.00	$15.46	$0.00	$75.54

Classification	Effective Date	Base Wage	Health	Pension	Supplemental Unemployment	Total Rate

Apprentice - *ELECTRICIAN - Local 103*

Effective Date - 09/01/2014

Step	percent	Apprentice Base Wage	Health	Pension	Supplemental Unemployment	Total Rate
1	40	$17.92	$13.00	$0.54	$0.00	$31.46
2	40	$17.92	$13.00	$0.54	$0.00	$31.46
3	45	$20.16	$13.00	$11.33	$0.00	$44.49
4	45	$20.16	$13.00	$11.33	$0.00	$44.49
5	50	$22.40	$13.00	$11.67	$0.00	$47.07
6	55	$24.63	$13.00	$12.01	$0.00	$49.64
7	60	$26.87	$13.00	$12.35	$0.00	$52.22
8	65	$29.11	$13.00	$12.68	$0.00	$54.79
9	70	$31.35	$13.00	$13.02	$0.00	$57.37
10	75	$33.59	$13.00	$13.36	$0.00	$59.95

Effective Date - 03/01/2015

Step	percent	Apprentice Base Wage	Health	Pension	Supplemental Unemployment	Total Rate
1	40	$18.07	$13.00	$0.54	$0.00	$31.61
2	40	$18.07	$13.00	$0.54	$0.00	$31.61
3	45	$20.33	$13.00	$11.64	$0.00	$44.97
4	45	$20.33	$13.00	$11.64	$0.00	$44.97
5	50	$22.59	$13.00	$11.98	$0.00	$47.57
6	55	$24.84	$13.00	$12.33	$0.00	$50.17
7	60	$27.10	$13.00	$12.66	$0.00	$52.76
8	65	$29.36	$13.00	$13.01	$0.00	$55.37
9	70	$31.62	$13.00	$13.35	$0.00	$57.97
10	75	$33.88	$13.00	$13.70	$0.00	$60.58

Notes: :

App Prior 1/1/03; 30/35/40/45/50/55/65/70/75/80

Apprentice to Journeyworker Ratio:2:3***

ELEVATOR CONSTRUCTOR *ELEVATOR CONSTRUCTORS LOCAL 4*	01/01/2012	$52.45	$8.78	$6.96	$0.00	$68.19

Classification	Effective Date	Base Wage	Health	Pension	Supplemental Unemployment	Total Rate

Apprentice - *ELEVATOR CONSTRUCTOR - Local 4*

Effective Date - 01/01/2012

Step	percent	Apprentice Base Wage	Health	Pension	Supplemental Unemployment	Total Rate
1	50	$26.23	$8.78	$0.00	$0.00	$35.01
2	55	$28.85	$8.78	$6.96	$0.00	$44.59
3	65	$34.09	$8.78	$6.96	$0.00	$49.83
4	70	$36.72	$8.78	$6.96	$0.00	$52.46
5	80	$41.96	$8.78	$6.96	$0.00	$57.70

Notes:

Steps 1-2 are 6 mos.; Steps 3-5 are 1 year

Apprentice to Journeyworker Ratio:1:1

ELEVATOR CONSTRUCTOR HELPER *ELEVATOR CONSTRUCTORS LOCAL 4*	01/01/2012	$38.59	$8.78	$6.96	$0.00	$54.33

For apprentice rates see "Apprentice - ELEVATOR CONSTRUCTOR"

FENCE & GUARD RAIL ERECTOR *LABORERS - ZONE 1*	12/01/2014	$34.85	$7.30	$12.95	$0.00	$55.10
	06/01/2015	$35.60	$7.30	$12.95	$0.00	$55.85
	12/01/2015	$36.35	$7.30	$12.95	$0.00	$56.60
	06/01/2016	$37.10	$7.30	$12.95	$0.00	$57.35
	12/01/2016	$38.10	$7.30	$12.95	$0.00	$58.35

For apprentice rates see "Apprentice- LABORER"

FIELD ENG.INST.PERSON-BLDG,SITE,HVY/HWY *OPERATING ENGINEERS LOCAL 4*	11/01/2014	$39.59	$10.00	$14.18	$0.00	$63.77
	05/01/2015	$40.32	$10.00	$14.18	$0.00	$64.50
	11/01/2015	$40.90	$10.00	$14.18	$0.00	$65.08
	05/01/2016	$41.79	$10.00	$14.18	$0.00	$65.97
	11/01/2016	$42.38	$10.00	$14.18	$0.00	$66.56
	05/01/2017	$43.26	$10.00	$14.18	$0.00	$67.44
	11/01/2017	$43.99	$10.00	$14.18	$0.00	$68.17
	05/01/2018	$44.70	$10.00	$14.18	$0.00	$68.88

For apprentice rates see "Apprentice- OPERATING ENGINEERS"

FIELD ENG.PARTY CHIEF-BLDG,SITE,HVY/HWY *OPERATING ENGINEERS LOCAL 4*	11/01/2014	$41.02	$10.00	$14.18	$0.00	$65.20
	05/01/2015	$41.75	$10.00	$14.18	$0.00	$65.93
	11/01/2015	$42.34	$10.00	$14.18	$0.00	$66.52
	05/01/2016	$43.23	$10.00	$14.18	$0.00	$67.41
	11/01/2016	$43.83	$10.00	$14.18	$0.00	$68.01
	05/01/2017	$44.72	$10.00	$14.18	$0.00	$68.90
	11/01/2017	$45.45	$10.00	$14.18	$0.00	$69.63
	05/01/2018	$46.17	$10.00	$14.18	$0.00	$70.35

For apprentice rates see "Apprentice- OPERATING ENGINEERS"

Classification	Effective Date	Base Wage	Health	Pension	Supplemental Unemployment	Total Rate
FIELD ENG.ROD PERSON-BLDG,SITE,HVY/HWY *OPERATING ENGINEERS LOCAL 4*	11/01/2014	$21.35	$10.00	$14.18	$0.00	$45.53
	05/01/2015	$21.78	$10.00	$14.18	$0.00	$45.96
	11/01/2015	$22.12	$10.00	$14.18	$0.00	$46.30
	05/01/2016	$22.64	$10.00	$14.18	$0.00	$46.82
	11/01/2016	$22.99	$10.00	$14.18	$0.00	$47.17
	05/01/2017	$23.52	$10.00	$14.18	$0.00	$47.70
	11/01/2017	$23.94	$10.00	$14.18	$0.00	$48.12
	05/01/2018	$24.37	$10.00	$14.18	$0.00	$48.55
For apprentice rates see "Apprentice- OPERATING ENGINEERS"						
FIRE ALARM INSTALLER *ELECTRICIANS LOCAL 103*	09/01/2014	$44.79	$13.00	$15.04	$0.00	$72.83
	03/01/2015	$45.17	$13.00	$15.40	$0.00	$73.57
	09/01/2015	$46.13	$13.00	$15.43	$0.00	$74.56
	03/01/2016	$47.08	$13.00	$15.46	$0.00	$75.54
For apprentice rates see "Apprentice- ELECTRICIAN"						
FIRE ALARM REPAIR / MAINTENANCE / COMMISSIONING*ELECTRICIANS LOCAL 103*	09/01/2014	$33.59	$13.00	$13.36	$0.00	$59.95
	03/01/2015	$33.88	$13.00	$13.70	$0.00	$60.58
	09/01/2015	$34.60	$13.00	$13.72	$0.00	$61.32
	03/01/2016	$35.31	$13.00	$13.74	$0.00	$62.05
For apprentice rates see "Apprentice- TELECOMMUNICATIONS TECHNICIAN"						
FIREMAN (ASST. ENGINEER) *OPERATING ENGINEERS LOCAL 4*	12/01/2014	$35.33	$10.00	$14.30	$0.00	$59.63
	06/01/2015	$35.95	$10.00	$14.30	$0.00	$60.25
	12/01/2015	$37.00	$10.00	$14.30	$0.00	$61.30
	06/01/2016	$37.62	$10.00	$14.30	$0.00	$61.92
	12/01/2016	$38.66	$10.00	$14.30	$0.00	$62.96
	06/01/2017	$39.50	$10.00	$14.30	$0.00	$63.80
	12/01/2017	$40.33	$10.00	$14.30	$0.00	$64.63
For apprentice rates see "Apprentice- OPERATING ENGINEERS"						
FLAGGER & SIGNALER *LABORERS - ZONE 1*	12/01/2014	$20.50	$7.30	$12.95	$0.00	$40.75
	06/01/2015	$20.50	$7.30	$12.95	$0.00	$40.75
	12/01/2015	$20.50	$7.30	$12.95	$0.00	$40.75
	06/01/2016	$20.50	$7.30	$12.95	$0.00	$40.75
	12/01/2016	$20.50	$7.30	$12.95	$0.00	$40.75
For apprentice rates see "Apprentice- LABORER"						
FLOORCOVERER *FLOORCOVERERS LOCAL 2168 ZONE I*	09/01/2014	$40.40	$9.80	$17.21	$0.00	$67.41

Classification	Effective Date	Base Wage	Health	Pension	Supplemental Unemployment	Total Rate

Apprentice - *FLOORCOVERER - Local 2168 Zone I*

Effective Date - 09/01/2014

Step	percent	Apprentice Base Wage	Health	Pension	Supplemental Unemployment	Total Rate
1	50	$20.20	$9.80	$1.79	$0.00	$31.79
2	55	$22.22	$9.80	$1.79	$0.00	$33.81
3	60	$24.24	$9.80	$11.84	$0.00	$45.88
4	65	$26.26	$9.80	$11.84	$0.00	$47.90
5	70	$28.28	$9.80	$13.63	$0.00	$51.71
6	75	$30.30	$9.80	$13.63	$0.00	$53.73
7	80	$32.32	$9.80	$15.42	$0.00	$57.54
8	85	$34.34	$9.80	$15.42	$0.00	$59.56

Notes:

Steps are 750 hrs.

Apprentice to Journeyworker Ratio:1:1

FORK LIFT/CHERRY PICKER *OPERATING ENGINEERS LOCAL 4*	12/01/2014	$42.39	$10.00	$14.30	$0.00	$66.69
	06/01/2015	$43.14	$10.00	$14.30	$0.00	$67.44
	12/01/2015	$44.39	$10.00	$14.30	$0.00	$68.69
	06/01/2016	$45.14	$10.00	$14.30	$0.00	$69.44
	12/01/2016	$46.39	$10.00	$14.30	$0.00	$70.69
	06/01/2017	$47.39	$10.00	$14.30	$0.00	$71.69
	12/01/2017	$48.39	$10.00	$14.30	$0.00	$72.69
For apprentice rates see "Apprentice- OPERATING ENGINEERS"						
GENERATOR/LIGHTING PLANT/HEATERS *OPERATING ENGINEERS LOCAL 4*	12/01/2014	$29.40	$10.00	$14.30	$0.00	$53.70
	06/01/2015	$29.92	$10.00	$14.30	$0.00	$54.22
	12/01/2015	$30.79	$10.00	$14.30	$0.00	$55.09
	06/01/2016	$31.31	$10.00	$14.30	$0.00	$55.61
	12/01/2016	$32.18	$10.00	$14.30	$0.00	$56.48
	06/01/2017	$32.87	$10.00	$14.30	$0.00	$57.17
	12/01/2017	$33.56	$10.00	$14.30	$0.00	$57.86
For apprentice rates see "Apprentice- OPERATING ENGINEERS"						
GLAZIER (GLASS PLANK/AIR BARRIER/INTERIOR SYSTEMS) *GLAZIERS LOCAL 35 (ZONE 1)*	01/01/2015	$42.95	$7.85	$16.10	$0.00	$66.90
	07/01/2015	$43.85	$7.85	$16.10	$0.00	$67.80
	01/01/2016	$44.80	$7.85	$16.10	$0.00	$68.75
	07/01/2016	$45.75	$7.85	$16.10	$0.00	$69.70
	01/01/2017	$46.70	$7.85	$16.10	$0.00	$70.65

Classification	Effective Date	Base Wage	Health	Pension	Supplemental Unemployment	Total Rate

Apprentice - *GLAZIER - Local 35 Zone 1*

Effective Date - 01/01/2015

Step	percent	Apprentice Base Wage	Health	Pension	Supplemental Unemployment	Total Rate
1	50	$21.48	$7.85	$0.00	$0.00	$29.33
2	55	$23.62	$7.85	$3.66	$0.00	$35.13
3	60	$25.77	$7.85	$3.99	$0.00	$37.61
4	65	$27.92	$7.85	$4.32	$0.00	$40.09
5	70	$30.07	$7.85	$14.11	$0.00	$52.03
6	75	$32.21	$7.85	$14.44	$0.00	$54.50
7	80	$34.36	$7.85	$14.77	$0.00	$56.98
8	90	$38.66	$7.85	$15.44	$0.00	$61.95

Effective Date - 07/01/2015

Step	percent	Apprentice Base Wage	Health	Pension	Supplemental Unemployment	Total Rate
1	50	$21.93	$7.85	$0.00	$0.00	$29.78
2	55	$24.12	$7.85	$3.66	$0.00	$35.63
3	60	$26.31	$7.85	$3.99	$0.00	$38.15
4	65	$28.50	$7.85	$4.32	$0.00	$40.67
5	70	$30.70	$7.85	$14.11	$0.00	$52.66
6	75	$32.89	$7.85	$14.44	$0.00	$55.18
7	80	$35.08	$7.85	$14.77	$0.00	$57.70
8	90	$39.47	$7.85	$15.44	$0.00	$62.76

Notes:

Steps are 750 hrs.

Apprentice to Journeyworker Ratio:1:1

HOISTING ENGINEER/CRANES/GRADALLS *OPERATING ENGINEERS LOCAL 4*	12/01/2014	$42.39	$10.00	$14.30	$0.00	$66.69
	06/01/2015	$43.14	$10.00	$14.30	$0.00	$67.44
	12/01/2015	$44.39	$10.00	$14.30	$0.00	$68.69
	06/01/2016	$45.14	$10.00	$14.30	$0.00	$69.44
	12/01/2016	$46.39	$10.00	$14.30	$0.00	$70.69
	06/01/2017	$47.39	$10.00	$14.30	$0.00	$71.69
	12/01/2017	$48.39	$10.00	$14.30	$0.00	$72.69

Classification	Effective Date	Base Wage	Health	Pension	Supplemental Unemployment	Total Rate

Apprentice - *OPERATING ENGINEERS - Local 4*

Effective Date - 12/01/2014

Step	percent	Apprentice Base Wage	Health	Pension	Supplemental Unemployment	Total Rate
1	55	$23.31	$10.00	$0.00	$0.00	$33.31
2	60	$25.43	$10.00	$14.30	$0.00	$49.73
3	65	$27.55	$10.00	$14.30	$0.00	$51.85
4	70	$29.67	$10.00	$14.30	$0.00	$53.97
5	75	$31.79	$10.00	$14.30	$0.00	$56.09
6	80	$33.91	$10.00	$14.30	$0.00	$58.21
7	85	$36.03	$10.00	$14.30	$0.00	$60.33
8	90	$38.15	$10.00	$14.30	$0.00	$62.45

Effective Date - 06/01/2015

Step	percent	Apprentice Base Wage	Health	Pension	Supplemental Unemployment	Total Rate
1	55	$23.73	$10.00	$0.00	$0.00	$33.73
2	60	$25.88	$10.00	$14.30	$0.00	$50.18
3	65	$28.04	$10.00	$14.30	$0.00	$52.34
4	70	$30.20	$10.00	$14.30	$0.00	$54.50
5	75	$32.36	$10.00	$14.30	$0.00	$56.66
6	80	$34.51	$10.00	$14.30	$0.00	$58.81
7	85	$36.67	$10.00	$14.30	$0.00	$60.97
8	90	$38.83	$10.00	$14.30	$0.00	$63.13

Notes:

Apprentice to Journeyworker Ratio:1:6

HVAC (DUCTWORK) *SHEETMETAL WORKERS LOCAL 17 - A*	02/01/2015	$43.69	$9.82	$20.54	$2.19	$76.24
	08/01/2015	$44.69	$9.82	$20.54	$2.19	$77.24
	02/01/2016	$45.69	$9.82	$20.54	$2.19	$78.24
	08/01/2016	$46.84	$9.82	$20.54	$2.19	$79.39
	02/01/2017	$47.94	$9.82	$20.54	$2.19	$80.49
	08/01/2017	$49.04	$9.82	$20.54	$2.19	$81.59
	02/01/2018	$50.19	$9.82	$20.54	$2.19	$82.74

For apprentice rates see "Apprentice- SHEET METAL WORKER"

HVAC (ELECTRICAL CONTROLS) *ELECTRICIANS LOCAL 103*	09/01/2014	$44.79	$13.00	$15.04	$0.00	$72.83
	03/01/2015	$45.17	$13.00	$15.40	$0.00	$73.57
	09/01/2015	$46.13	$13.00	$15.43	$0.00	$74.56
	03/01/2016	$47.08	$13.00	$15.46	$0.00	$75.54

For apprentice rates see "Apprentice- ELECTRICIAN"

Classification	Effective Date	Base Wage	Health	Pension	Supplemental Unemployment	Total Rate
HVAC (TESTING AND BALANCING - AIR) *SHEETMETAL WORKERS LOCAL 17 - A*	02/01/2015	$43.69	$9.82	$20.54	$2.19	$76.24
	08/01/2015	$44.69	$9.82	$20.54	$2.19	$77.24
	02/01/2016	$45.69	$9.82	$20.54	$2.19	$78.24
	08/01/2016	$46.84	$9.82	$20.54	$2.19	$79.39
	02/01/2017	$47.94	$9.82	$20.54	$2.19	$80.49
	08/01/2017	$49.04	$9.82	$20.54	$2.19	$81.59
	02/01/2018	$50.19	$9.82	$20.54	$2.19	$82.74
For apprentice rates see "Apprentice- SHEET METAL WORKER"						
HVAC (TESTING AND BALANCING -WATER) *PIPEFITTERS LOCAL 537*	09/01/2014	$48.69	$9.20	$16.64	$0.00	$74.53
	03/01/2015	$49.69	$9.20	$16.64	$0.00	$75.53
	09/01/2015	$50.69	$9.20	$16.64	$0.00	$76.53
	03/01/2016	$51.69	$9.20	$16.64	$0.00	$77.53
	09/01/2016	$52.69	$9.20	$16.64	$0.00	$78.53
	03/01/2017	$53.69	$9.20	$16.64	$0.00	$79.53
For apprentice rates see "Apprentice- PIPEFITTER" or "PLUMBER/PIPEFITTER"						
HVAC MECHANIC *PIPEFITTERS LOCAL 537*	09/01/2014	$48.69	$9.20	$16.64	$0.00	$74.53
	03/01/2015	$49.69	$9.20	$16.64	$0.00	$75.53
	09/01/2015	$50.69	$9.20	$16.64	$0.00	$76.53
	03/01/2016	$51.69	$9.20	$16.64	$0.00	$77.53
	09/01/2016	$52.69	$9.20	$16.64	$0.00	$78.53
	03/01/2017	$53.69	$9.20	$16.64	$0.00	$79.53
For apprentice rates see "Apprentice- PIPEFITTER" or "PLUMBER/PIPEFITTER"						
HYDRAULIC DRILLS *LABORERS - ZONE 1*	12/01/2014	$35.35	$7.30	$12.95	$0.00	$55.60
	06/01/2015	$36.10	$7.30	$12.95	$0.00	$56.35
	12/01/2015	$36.85	$7.30	$12.95	$0.00	$57.10
	06/01/2016	$37.60	$7.30	$12.95	$0.00	$57.85
	12/01/2016	$38.60	$7.30	$12.95	$0.00	$58.85
For apprentice rates see "Apprentice- LABORER"						
INSULATOR (PIPES & TANKS) *HEAT & FROST INSULATORS LOCAL 6 (BOSTON)*	09/01/2014	$43.31	$11.25	$12.60	$0.00	$67.16

Apprentice - *ASBESTOS INSULATOR (Pipes & Tanks) - Local 6 Boston*

Effective Date - 09/01/2014

Step	percent	Apprentice Base Wage	Health	Pension	Supplemental Unemployment	Total Rate
1	50	$21.66	$11.25	$9.35	$0.00	$42.26
2	60	$25.99	$11.25	$10.00	$0.00	$47.24
3	70	$30.32	$11.25	$10.65	$0.00	$52.22
4	80	$34.65	$11.25	$11.30	$0.00	$57.20

Notes:

Steps are 1 year

Apprentice to Journeyworker Ratio:1:4

IRONWORKER/WELDER *IRONWORKERS LOCAL 7 (BOSTON AREA)*	03/16/2014	$41.19	$7.70	$19.25	$0.00	$68.14

Classification	Effective Date	Base Wage	Health	Pension	Supplemental Unemployment	Total Rate

Apprentice - *IRONWORKER - Local 7 Boston*

Effective Date - 03/16/2014

Step	percent	Apprentice Base Wage	Health	Pension	Supplemental Unemployment	Total Rate
1	60	$24.71	$7.70	$19.25	$0.00	$51.66
2	70	$28.83	$7.70	$19.25	$0.00	$55.78
3	75	$30.89	$7.70	$19.25	$0.00	$57.84
4	80	$32.95	$7.70	$19.25	$0.00	$59.90
5	85	$35.01	$7.70	$19.25	$0.00	$61.96
6	90	$37.07	$7.70	$19.25	$0.00	$64.02

Notes:

** Structural 1:6; Ornamental 1:4

Apprentice to Journeyworker Ratio:**

JACKHAMMER & PAVING BREAKER OPERATOR *LABORERS - ZONE 1*	12/01/2014	$34.85	$7.30	$12.95	$0.00	$55.10
	06/01/2015	$35.60	$7.30	$12.95	$0.00	$55.85
	12/01/2015	$36.35	$7.30	$12.95	$0.00	$56.60
	06/01/2016	$37.10	$7.30	$12.95	$0.00	$57.35
	12/01/2016	$38.10	$7.30	$12.95	$0.00	$58.35
For apprentice rates see "Apprentice- LABORER"						
LABORER *LABORERS - ZONE 1*	12/01/2014	$34.60	$7.30	$12.95	$0.00	$54.85
	06/01/2015	$35.35	$7.30	$12.95	$0.00	$55.60
	12/01/2015	$36.10	$7.30	$12.95	$0.00	$56.35
	06/01/2016	$36.85	$7.30	$12.95	$0.00	$57.10
	12/01/2016	$37.85	$7.30	$12.95	$0.00	$58.10

Apprentice - *LABORER - Zone 1*

Effective Date - 12/01/2014

Step	percent	Apprentice Base Wage	Health	Pension	Supplemental Unemployment	Total Rate
1	60	$20.76	$7.30	$12.95	$0.00	$41.01
2	70	$24.22	$7.30	$12.95	$0.00	$44.47
3	80	$27.68	$7.30	$12.95	$0.00	$47.93
4	90	$31.14	$7.30	$12.95	$0.00	$51.39

Effective Date - 06/01/2015

Step	percent	Apprentice Base Wage	Health	Pension	Supplemental Unemployment	Total Rate
1	60	$21.21	$7.30	$12.95	$0.00	$41.46
2	70	$24.75	$7.30	$12.95	$0.00	$45.00
3	80	$28.28	$7.30	$12.95	$0.00	$48.53
4	90	$31.82	$7.30	$12.95	$0.00	$52.07

Notes:

Apprentice to Journeyworker Ratio:1:5

Classification	Effective Date	Base Wage	Health	Pension	Supplemental Unemployment	Total Rate
LABORER: CARPENTER TENDER *LABORERS - ZONE 1*	12/01/2014	$34.60	$7.30	$12.95	$0.00	$54.85
	06/01/2015	$35.35	$7.30	$12.95	$0.00	$55.60
	12/01/2015	$36.10	$7.30	$12.95	$0.00	$56.35
	06/01/2016	$36.85	$7.30	$12.95	$0.00	$57.10
	12/01/2016	$37.85	$7.30	$12.95	$0.00	$58.10
For apprentice rates see "Apprentice- LABORER"						
LABORER: CEMENT FINISHER TENDER *LABORERS - ZONE 1*	12/01/2014	$34.60	$7.30	$12.95	$0.00	$54.85
	06/01/2015	$35.35	$7.30	$12.95	$0.00	$55.60
	12/01/2015	$36.10	$7.30	$12.95	$0.00	$56.35
	06/01/2016	$36.85	$7.30	$12.95	$0.00	$57.10
	12/01/2016	$37.85	$7.30	$12.95	$0.00	$58.10
For apprentice rates see "Apprentice- LABORER"						
LABORER: HAZARDOUS WASTE/ASBESTOS REMOVER *LABORERS - ZONE 1*	12/01/2014	$34.75	$7.30	$12.95	$0.00	$55.00
	06/01/2015	$35.50	$7.30	$12.95	$0.00	$55.75
	12/01/2015	$36.25	$7.30	$12.95	$0.00	$56.50
For apprentice rates see "Apprentice- LABORER"						
LABORER: MASON TENDER *LABORERS - ZONE 1*	12/01/2014	$34.85	$7.30	$12.95	$0.00	$55.10
	06/01/2015	$35.60	$7.30	$12.95	$0.00	$55.85
	12/01/2015	$36.35	$7.30	$12.95	$0.00	$56.60
	06/01/2016	$37.10	$7.30	$12.95	$0.00	$57.35
	12/01/2016	$38.10	$7.30	$12.95	$0.00	$58.35
For apprentice rates see "Apprentice- LABORER"						
LABORER: MULTI-TRADE TENDER *LABORERS - ZONE 1*	12/01/2014	$34.60	$7.30	$12.95	$0.00	$54.85
	06/01/2015	$35.35	$7.30	$12.95	$0.00	$55.60
	12/01/2015	$36.10	$7.30	$12.95	$0.00	$56.35
	06/01/2016	$36.85	$7.30	$12.95	$0.00	$57.10
	12/01/2016	$37.85	$7.30	$12.95	$0.00	$58.10
For apprentice rates see "Apprentice- LABORER"						
LABORER: TREE REMOVER *LABORERS - ZONE 1*	12/01/2014	$34.60	$7.30	$12.95	$0.00	$54.85
	06/01/2015	$35.35	$7.30	$12.95	$0.00	$55.60
	12/01/2015	$36.10	$7.30	$12.95	$0.00	$56.35
	06/01/2016	$36.85	$7.30	$12.95	$0.00	$57.10
	12/01/2016	$37.85	$7.30	$12.95	$0.00	$58.10
This classification applies to all tree work associated with the removal of standing trees, and trimming and removal of branches and limbs when the work is not done for a utility company for the purpose of operation, maintenance or repair of utility company equipment. For apprentice rates see "Apprentice- LABORER"						
LASER BEAM OPERATOR *LABORERS - ZONE 1*	12/01/2014	$34.85	$7.30	$12.95	$0.00	$55.10
	06/01/2015	$35.60	$7.30	$12.95	$0.00	$55.85
	12/01/2015	$36.35	$7.30	$12.95	$0.00	$56.60
	06/01/2016	$37.10	$7.30	$12.95	$0.00	$57.35
	12/01/2016	$38.10	$7.30	$12.95	$0.00	$58.35
For apprentice rates see "Apprentice- LABORER"						
MARBLE & TILE FINISHERS *BRICKLAYERS LOCAL 3 - MARBLE & TILE*	02/01/2015	$37.37	$10.18	$17.18	$0.00	$64.73
	08/01/2015	$38.08	$10.18	$17.25	$0.00	$65.51
	02/01/2016	$38.53	$10.18	$17.25	$0.00	$65.96
	08/01/2016	$39.23	$10.18	$17.33	$0.00	$66.74
	02/01/2017	$39.69	$10.18	$17.33	$0.00	$67.20

Classification	Effective Date	Base Wage	Health	Pension	Supplemental Unemployment	Total Rate

Apprentice - *MARBLE & TILE FINISHER - Local 3 Marble & Tile*

Effective Date - 02/01/2015

Step	percent	Apprentice Base Wage	Health	Pension	Supplemental Unemployment	Total Rate
1	50	$18.69	$10.18	$17.18	$0.00	$46.05
2	60	$22.42	$10.18	$17.18	$0.00	$49.78
3	70	$26.16	$10.18	$17.18	$0.00	$53.52
4	80	$29.90	$10.18	$17.18	$0.00	$57.26
5	90	$33.63	$10.18	$17.18	$0.00	$60.99

Effective Date - 08/01/2015

Step	percent	Apprentice Base Wage	Health	Pension	Supplemental Unemployment	Total Rate
1	50	$19.04	$10.18	$17.25	$0.00	$46.47
2	60	$22.85	$10.18	$17.25	$0.00	$50.28
3	70	$26.66	$10.18	$17.25	$0.00	$54.09
4	80	$30.46	$10.18	$17.25	$0.00	$57.89
5	90	$34.27	$10.18	$17.25	$0.00	$61.70

Notes:

Apprentice to Journeyworker Ratio:1:3

MARBLE MASONS,TILELAYERS & TERRAZZO MECH *BRICKLAYERS LOCAL 3 - MARBLE & TILE*	02/01/2015	$49.00	$10.18	$18.50	$0.00	$77.68
	08/01/2015	$49.90	$10.18	$18.57	$0.00	$78.65
	02/01/2016	$50.47	$10.18	$18.57	$0.00	$79.22
	08/01/2016	$51.37	$10.18	$18.65	$0.00	$80.20
	02/01/2017	$51.94	$10.18	$18.65	$0.00	$80.77

Classification	Effective Date	Base Wage	Health	Pension	Supplemental Unemployment	Total Rate

Apprentice - *MARBLE-TILE-TERRAZZO MECHANIC - Local 3 Marble & Tile*

Effective Date - 02/01/2015

Step	percent	Apprentice Base Wage	Health	Pension	Supplemental Unemployment	Total Rate
1	50	$24.50	$10.18	$18.50	$0.00	$53.18
2	60	$29.40	$10.18	$18.50	$0.00	$58.08
3	70	$34.30	$10.18	$18.50	$0.00	$62.98
4	80	$39.20	$10.18	$18.50	$0.00	$67.88
5	90	$44.10	$10.18	$18.50	$0.00	$72.78

Effective Date - 08/01/2015

Step	percent	Apprentice Base Wage	Health	Pension	Supplemental Unemployment	Total Rate
1	50	$24.95	$10.18	$18.57	$0.00	$53.70
2	60	$29.94	$10.18	$18.57	$0.00	$58.69
3	70	$34.93	$10.18	$18.57	$0.00	$63.68
4	80	$39.92	$10.18	$18.57	$0.00	$68.67
5	90	$44.91	$10.18	$18.57	$0.00	$73.66

Notes:

Apprentice to Journeyworker Ratio:1:5

MECH. SWEEPER OPERATOR (ON CONST. SITES) *OPERATING ENGINEERS LOCAL 4*	12/01/2014	$41.99	$10.00	$14.30	$0.00	$66.29
	06/01/2015	$42.73	$10.00	$14.30	$0.00	$67.03
	12/01/2015	$43.97	$10.00	$14.30	$0.00	$68.27
	06/01/2016	$44.72	$10.00	$14.30	$0.00	$69.02
	12/01/2016	$45.95	$10.00	$14.30	$0.00	$70.25
	06/01/2017	$46.94	$10.00	$14.30	$0.00	$71.24
	12/01/2017	$47.93	$10.00	$14.30	$0.00	$72.23
For apprentice rates see "Apprentice- OPERATING ENGINEERS"						
MECHANICS MAINTENANCE *OPERATING ENGINEERS LOCAL 4*	12/01/2014	$41.99	$10.00	$14.30	$0.00	$66.29
	06/01/2015	$42.73	$10.00	$14.30	$0.00	$67.03
	12/01/2015	$43.97	$10.00	$14.30	$0.00	$68.27
	06/01/2016	$44.72	$10.00	$14.30	$0.00	$69.02
	12/01/2016	$45.95	$10.00	$14.30	$0.00	$70.25
	06/01/2017	$46.94	$10.00	$14.30	$0.00	$71.24
	12/01/2017	$47.93	$10.00	$14.30	$0.00	$72.23
For apprentice rates see "Apprentice- OPERATING ENGINEERS"						
MILLWRIGHT (Zone 1) *MILLWRIGHTS LOCAL 1121 - Zone 1*	10/01/2014	$36.68	$9.80	$16.21	$0.00	$62.69
	04/01/2015	$37.64	$9.80	$16.21	$0.00	$63.65

Classification	Effective Date	Base Wage	Health	Pension	Supplemental Unemployment	Total Rate

Apprentice - *MILLWRIGHT - Local 1121 Zone 1*

Effective Date - 10/01/2014

Step	percent	Apprentice Base Wage	Health	Pension	Supplemental Unemployment	Total Rate
1	55	$20.17	$9.80	$4.48	$0.00	$34.45
2	65	$23.84	$9.80	$13.36	$0.00	$47.00
3	75	$27.51	$9.80	$14.18	$0.00	$51.49
4	85	$31.18	$9.80	$14.99	$0.00	$55.97

Effective Date - 04/01/2015

Step	percent	Apprentice Base Wage	Health	Pension	Supplemental Unemployment	Total Rate
1	55	$20.70	$9.80	$4.48	$0.00	$34.98
2	65	$24.47	$9.80	$13.36	$0.00	$47.63
3	75	$28.23	$9.80	$14.18	$0.00	$52.21
4	85	$31.99	$9.80	$14.99	$0.00	$56.78

Notes:

Steps are 2,000 hours

Apprentice to Journeyworker Ratio:1:5

MORTAR MIXER *LABORERS - ZONE 1*	12/01/2014	$34.85	$7.30	$12.95	$0.00	$55.10
	06/01/2015	$35.60	$7.30	$12.95	$0.00	$55.85
	12/01/2015	$36.35	$7.30	$12.95	$0.00	$56.60
	06/01/2016	$37.10	$7.30	$12.95	$0.00	$57.35
	12/01/2016	$38.10	$7.30	$12.95	$0.00	$58.35
For apprentice rates see "Apprentice- LABORER"						
OILER (OTHER THAN TRUCK CRANES,GRADALLS) *OPERATING ENGINEERS LOCAL 4*	12/01/2014	$21.90	$10.00	$14.30	$0.00	$46.20
	06/01/2015	$22.28	$10.00	$14.30	$0.00	$46.58
	12/01/2015	$22.93	$10.00	$14.30	$0.00	$47.23
	06/01/2016	$23.32	$10.00	$14.30	$0.00	$47.62
	12/01/2016	$23.97	$10.00	$14.30	$0.00	$48.27
	06/01/2017	$24.48	$10.00	$14.30	$0.00	$48.78
	12/01/2017	$25.00	$10.00	$14.30	$0.00	$49.30
For apprentice rates see "Apprentice- OPERATING ENGINEERS"						
OILER (TRUCK CRANES, GRADALLS) *OPERATING ENGINEERS LOCAL 4*	12/01/2014	$25.54	$10.00	$14.30	$0.00	$49.84
	06/01/2015	$25.99	$10.00	$14.30	$0.00	$50.29
	12/01/2015	$26.74	$10.00	$14.30	$0.00	$51.04
	06/01/2016	$27.20	$10.00	$14.30	$0.00	$51.50
	12/01/2016	$27.95	$10.00	$14.30	$0.00	$52.25
	06/01/2017	$28.55	$10.00	$14.30	$0.00	$52.85
	12/01/2017	$29.16	$10.00	$14.30	$0.00	$53.46
For apprentice rates see "Apprentice- OPERATING ENGINEERS"						

Classification	Effective Date	Base Wage	Health	Pension	Supplemental Unemployment	Total Rate
OTHER POWER DRIVEN EQUIPMENT - CLASS II *OPERATING ENGINEERS LOCAL 4*	12/01/2014	$41.99	$10.00	$14.30	$0.00	$66.29
	06/01/2015	$42.73	$10.00	$14.30	$0.00	$67.03
	12/01/2015	$43.97	$10.00	$14.30	$0.00	$68.27
	06/01/2016	$44.72	$10.00	$14.30	$0.00	$69.02
	12/01/2016	$45.95	$10.00	$14.30	$0.00	$70.25
	06/01/2017	$46.94	$10.00	$14.30	$0.00	$71.24
	12/01/2017	$47.93	$10.00	$14.30	$0.00	$72.23
For apprentice rates see "Apprentice- OPERATING ENGINEERS"						
PAINTER (BRIDGES/TANKS) *PAINTERS LOCAL 35 - ZONE 1*	01/01/2015	$47.66	$7.85	$16.10	$0.00	$71.61
	07/01/2015	$48.56	$7.85	$16.10	$0.00	$72.51
	01/01/2016	$49.51	$7.85	$16.10	$0.00	$73.46
	07/01/2016	$50.46	$7.85	$16.10	$0.00	$74.41
	01/01/2017	$51.41	$7.85	$16.10	$0.00	$75.36

Apprentice - *PAINTER Local 35 - BRIDGES/TANKS*

Effective Date - 01/01/2015

Step	percent	Apprentice Base Wage	Health	Pension	Supplemental Unemployment	Total Rate
1	50	$23.83	$7.85	$0.00	$0.00	$31.68
2	55	$26.21	$7.85	$3.66	$0.00	$37.72
3	60	$28.60	$7.85	$3.99	$0.00	$40.44
4	65	$30.98	$7.85	$4.32	$0.00	$43.15
5	70	$33.36	$7.85	$14.11	$0.00	$55.32
6	75	$35.75	$7.85	$14.44	$0.00	$58.04
7	80	$38.13	$7.85	$14.77	$0.00	$60.75
8	90	$42.89	$7.85	$15.44	$0.00	$66.18

Effective Date - 07/01/2015

Step	percent	Apprentice Base Wage	Health	Pension	Supplemental Unemployment	Total Rate
1	50	$24.28	$7.85	$0.00	$0.00	$32.13
2	55	$26.71	$7.85	$3.66	$0.00	$38.22
3	60	$29.14	$7.85	$3.99	$0.00	$40.98
4	65	$31.56	$7.85	$4.32	$0.00	$43.73
5	70	$33.99	$7.85	$14.11	$0.00	$55.95
6	75	$36.42	$7.85	$14.44	$0.00	$58.71
7	80	$38.85	$7.85	$14.77	$0.00	$61.47
8	90	$43.70	$7.85	$15.44	$0.00	$66.99

Notes:

Steps are 750 hrs.

Apprentice to Journeyworker Ratio:1:1

PAINTER (SPRAY OR SANDBLAST, NEW) * * If 30% or more of surfaces to be painted are new construction, NEW paint rate shall be used.*PAINTERS LOCAL 35 - ZONE 1*	01/01/2015	$44.35	$7.85	$16.10	$0.00	$68.30
	07/01/2015	$45.25	$7.85	$16.10	$0.00	$69.20
	01/01/2016	$46.20	$7.85	$16.10	$0.00	$70.15
	07/01/2016	$47.15	$7.85	$16.10	$0.00	$71.10
	01/01/2017	$48.10	$7.85	$16.10	$0.00	$72.05

Classification	Effective Date	Base Wage	Health	Pension	Supplemental Unemployment	Total Rate

Apprentice - *PAINTER Local 35 Zone 1 - Spray/Sandblast - New*

Effective Date - 01/01/2015

Step	percent	Apprentice Base Wage	Health	Pension	Supplemental Unemployment	Total Rate
1	50	$22.18	$7.85	$0.00	$0.00	$30.03
2	55	$24.39	$7.85	$3.66	$0.00	$35.90
3	60	$26.61	$7.85	$3.99	$0.00	$38.45
4	65	$28.83	$7.85	$4.32	$0.00	$41.00
5	70	$31.05	$7.85	$14.11	$0.00	$53.01
6	75	$33.26	$7.85	$14.44	$0.00	$55.55
7	80	$35.48	$7.85	$14.77	$0.00	$58.10
8	90	$39.92	$7.85	$15.44	$0.00	$63.21

Effective Date - 07/01/2015

Step	percent	Apprentice Base Wage	Health	Pension	Supplemental Unemployment	Total Rate
1	50	$22.63	$7.85	$0.00	$0.00	$30.48
2	55	$24.89	$7.85	$3.66	$0.00	$36.40
3	60	$27.15	$7.85	$3.99	$0.00	$38.99
4	65	$29.41	$7.85	$4.32	$0.00	$41.58
5	70	$31.68	$7.85	$14.11	$0.00	$53.64
6	75	$33.94	$7.85	$14.44	$0.00	$56.23
7	80	$36.20	$7.85	$14.77	$0.00	$58.82
8	90	$40.73	$7.85	$15.44	$0.00	$64.02

Notes:

Steps are 750 hrs.

Apprentice to Journeyworker Ratio:1:1

PAINTER (SPRAY OR SANDBLAST, REPAINT) *PAINTERS LOCAL 35 - ZONE 1*	01/01/2015	$42.41	$7.85	$16.10	$0.00	$66.36
	07/01/2015	$43.31	$7.85	$16.10	$0.00	$67.26
	01/01/2016	$44.26	$7.85	$16.10	$0.00	$68.21
	07/01/2016	$45.21	$7.85	$16.10	$0.00	$69.16
	01/01/2017	$46.16	$7.85	$16.10	$0.00	$70.11

Classification	Effective Date	Base Wage	Health	Pension	Supplemental Unemployment	Total Rate

Apprentice - *PAINTER Local 35 Zone 1 - Spray/Sandblast - Repaint*

Effective Date - 01/01/2015

Step	percent	Apprentice Base Wage	Health	Pension	Supplemental Unemployment	Total Rate
1	50	$21.21	$7.85	$0.00	$0.00	$29.06
2	55	$23.33	$7.85	$3.66	$0.00	$34.84
3	60	$25.45	$7.85	$3.99	$0.00	$37.29
4	65	$27.57	$7.85	$4.32	$0.00	$39.74
5	70	$29.69	$7.85	$14.11	$0.00	$51.65
6	75	$31.81	$7.85	$14.44	$0.00	$54.10
7	80	$33.93	$7.85	$14.77	$0.00	$56.55
8	90	$38.17	$7.85	$15.44	$0.00	$61.46

Effective Date - 07/01/2015

Step	percent	Apprentice Base Wage	Health	Pension	Supplemental Unemployment	Total Rate
1	50	$21.66	$7.85	$0.00	$0.00	$29.51
2	55	$23.82	$7.85	$3.66	$0.00	$35.33
3	60	$25.99	$7.85	$3.99	$0.00	$37.83
4	65	$28.15	$7.85	$4.32	$0.00	$40.32
5	70	$30.32	$7.85	$14.11	$0.00	$52.28
6	75	$32.48	$7.85	$14.44	$0.00	$54.77
7	80	$34.65	$7.85	$14.77	$0.00	$57.27
8	90	$38.98	$7.85	$15.44	$0.00	$62.27

Notes:

Steps are 750 hrs.

Apprentice to Journeyworker Ratio:1:1

PAINTER (TRAFFIC MARKINGS) *LABORERS - ZONE 1*	12/01/2014	$34.60	$7.30	$12.95	$0.00	$54.85
	06/01/2015	$35.35	$7.30	$12.95	$0.00	$55.60
	12/01/2015	$36.10	$7.30	$12.95	$0.00	$56.35
	06/01/2016	$36.85	$7.30	$12.95	$0.00	$57.10
	12/01/2016	$37.85	$7.30	$12.95	$0.00	$58.10
For Apprentice rates see "Apprentice- LABORER"						
PAINTER / TAPER (BRUSH, NEW) * * If 30% or more of surfaces to be painted are new construction, NEW paint rate shall be used.*PAINTERS LOCAL 35 - ZONE 1*	01/01/2015	$42.95	$7.85	$16.10	$0.00	$66.90
	07/01/2015	$43.85	$7.85	$16.10	$0.00	$67.80
	01/01/2016	$44.80	$7.85	$16.10	$0.00	$68.75
	07/01/2016	$45.75	$7.85	$16.10	$0.00	$69.70
	01/01/2017	$46.70	$7.85	$16.10	$0.00	$70.65

Classification	Effective Date	Base Wage	Health	Pension	Supplemental Unemployment	Total Rate

Apprentice - *PAINTER - Local 35 Zone 1 - BRUSH NEW*

Effective Date - 01/01/2015

Step	percent	Apprentice Base Wage	Health	Pension	Supplemental Unemployment	Total Rate
1	50	$21.48	$7.85	$0.00	$0.00	$29.33
2	55	$23.62	$7.85	$3.66	$0.00	$35.13
3	60	$25.77	$7.85	$3.99	$0.00	$37.61
4	65	$27.92	$7.85	$4.32	$0.00	$40.09
5	70	$30.07	$7.85	$14.11	$0.00	$52.03
6	75	$32.21	$7.85	$14.44	$0.00	$54.50
7	80	$34.36	$7.85	$14.77	$0.00	$56.98
8	90	$38.66	$7.85	$15.44	$0.00	$61.95

Effective Date - 07/01/2015

Step	percent	Apprentice Base Wage	Health	Pension	Supplemental Unemployment	Total Rate
1	50	$21.93	$7.85	$0.00	$0.00	$29.78
2	55	$24.12	$7.85	$3.66	$0.00	$35.63
3	60	$26.31	$7.85	$3.99	$0.00	$38.15
4	65	$28.50	$7.85	$4.32	$0.00	$40.67
5	70	$30.70	$7.85	$14.11	$0.00	$52.66
6	75	$32.89	$7.85	$14.44	$0.00	$55.18
7	80	$35.08	$7.85	$14.77	$0.00	$57.70
8	90	$39.47	$7.85	$15.44	$0.00	$62.76

Notes:

Steps are 750 hrs.

Apprentice to Journeyworker Ratio:1:1

PAINTER / TAPER (BRUSH, REPAINT) *PAINTERS LOCAL 35 - ZONE 1*	01/01/2015	$41.01	$7.85	$16.10	$0.00	$64.96
	07/01/2015	$41.91	$7.85	$16.10	$0.00	$65.86
	01/01/2016	$42.86	$7.85	$16.10	$0.00	$66.81
	07/01/2016	$43.81	$7.85	$16.10	$0.00	$67.76
	01/01/2017	$44.76	$7.85	$16.10	$0.00	$68.71

Classification	Effective Date	Base Wage	Health	Pension	Supplemental Unemployment	Total Rate

Apprentice - *PAINTER Local 35 Zone 1 - BRUSH REPAINT*

Effective Date - 01/01/2015

Step	percent	Apprentice Base Wage	Health	Pension	Supplemental Unemployment	Total Rate
1	50	$20.51	$7.85	$0.00	$0.00	$28.36
2	55	$22.56	$7.85	$3.66	$0.00	$34.07
3	60	$24.61	$7.85	$3.99	$0.00	$36.45
4	65	$26.66	$7.85	$4.32	$0.00	$38.83
5	70	$28.71	$7.85	$14.11	$0.00	$50.67
6	75	$30.76	$7.85	$14.44	$0.00	$53.05
7	80	$32.81	$7.85	$14.77	$0.00	$55.43
8	90	$36.91	$7.85	$15.44	$0.00	$60.20

Effective Date - 07/01/2015

Step	percent	Apprentice Base Wage	Health	Pension	Supplemental Unemployment	Total Rate
1	50	$20.96	$7.85	$0.00	$0.00	$28.81
2	55	$23.05	$7.85	$3.66	$0.00	$34.56
3	60	$25.15	$7.85	$3.99	$0.00	$36.99
4	65	$27.24	$7.85	$4.32	$0.00	$39.41
5	70	$29.34	$7.85	$14.11	$0.00	$51.30
6	75	$31.43	$7.85	$14.44	$0.00	$53.72
7	80	$33.53	$7.85	$14.77	$0.00	$56.15
8	90	$37.72	$7.85	$15.44	$0.00	$61.01

Notes:

Steps are 750 hrs.

Apprentice to Journeyworker Ratio:1:1

PANEL & PICKUP TRUCKS DRIVER *TEAMSTERS JOINT COUNCIL NO. 10 ZONE A*	12/01/2014	$32.23	$9.91	$9.33	$0.00	$51.47
	06/01/2015	$32.58	$9.91	$9.33	$0.00	$51.82
	08/01/2015	$32.58	$10.41	$9.33	$0.00	$52.32
	12/01/2015	$32.58	$10.41	$10.08	$0.00	$53.07
	06/01/2016	$33.08	$10.41	$10.08	$0.00	$53.57
	08/01/2016	$33.08	$10.91	$10.08	$0.00	$54.07
	12/01/2016	$33.08	$10.91	$10.89	$0.00	$54.88
PIER AND DOCK CONSTRUCTOR (UNDERPINNING AND DECK) *PILE DRIVER LOCAL 56 (ZONE 1)*	08/01/2014	$41.60	$9.80	$18.17	$0.00	$69.57
	08/01/2015	$43.10	$9.80	$18.17	$0.00	$71.07
PILE DRIVER *PILE DRIVER LOCAL 56 (ZONE 1)*	08/01/2014	$41.60	$9.80	$18.17	$0.00	$69.57
	08/01/2015	$43.10	$9.80	$18.17	$0.00	$71.07

Classification	Effective Date	Base Wage	Health	Pension	Supplemental Unemployment	Total Rate

Apprentice - *PILE DRIVER - Local 56 Zone 1*

Effective Date - 08/01/2014

Step	percent	Apprentice Base Wage	Health	Pension	Supplemental Unemployment	Total Rate
1	50	$20.80	$9.80	$18.17	$0.00	$48.77
2	60	$24.96	$9.80	$18.17	$0.00	$52.93
3	70	$29.12	$9.80	$18.17	$0.00	$57.09
4	75	$31.20	$9.80	$18.17	$0.00	$59.17
5	80	$33.28	$9.80	$18.17	$0.00	$61.25
6	80	$33.28	$9.80	$18.17	$0.00	$61.25
7	90	$37.44	$9.80	$18.17	$0.00	$65.41
8	90	$37.44	$9.80	$18.17	$0.00	$65.41

Effective Date - 08/01/2015

Step	percent	Apprentice Base Wage	Health	Pension	Supplemental Unemployment	Total Rate
1	50	$21.55	$9.80	$18.17	$0.00	$49.52
2	60	$25.86	$9.80	$18.17	$0.00	$53.83
3	70	$30.17	$9.80	$18.17	$0.00	$58.14
4	75	$32.33	$9.80	$18.17	$0.00	$60.30
5	80	$34.48	$9.80	$18.17	$0.00	$62.45
6	80	$34.48	$9.80	$18.17	$0.00	$62.45
7	90	$38.79	$9.80	$18.17	$0.00	$66.76
8	90	$38.79	$9.80	$18.17	$0.00	$66.76

Notes:

Apprentice to Journeyworker Ratio:1:3

PIPEFITTER & STEAMFITTER *PIPEFITTERS LOCAL 537*	09/01/2014	$48.69	$9.20	$16.64	$0.00	$74.53
	03/01/2015	$49.69	$9.20	$16.64	$0.00	$75.53
	09/01/2015	$50.69	$9.20	$16.64	$0.00	$76.53
	03/01/2016	$51.69	$9.20	$16.64	$0.00	$77.53
	09/01/2016	$52.69	$9.20	$16.64	$0.00	$78.53
	03/01/2017	$53.69	$9.20	$16.64	$0.00	$79.53

Classification	Effective Date	Base Wage	Health	Pension	Supplemental Unemployment	Total Rate

Apprentice - *PIPEFITTER - Local 537*

Effective Date - 09/01/2014

Step	percent	Apprentice Base Wage	Health	Pension	Supplemental Unemployment	Total Rate
1	40	$19.48	$9.20	$7.50	$0.00	$36.18
2	45	$21.91	$9.20	$16.64	$0.00	$47.75
3	60	$29.21	$9.20	$16.64	$0.00	$55.05
4	70	$34.08	$9.20	$16.64	$0.00	$59.92
5	80	$38.95	$9.20	$16.64	$0.00	$64.79

Effective Date - 03/01/2015

Step	percent	Apprentice Base Wage	Health	Pension	Supplemental Unemployment	Total Rate
1	40	$19.88	$9.20	$7.50	$0.00	$36.58
2	45	$22.36	$9.20	$16.64	$0.00	$48.20
3	60	$29.81	$9.20	$16.64	$0.00	$55.65
4	70	$34.78	$9.20	$16.64	$0.00	$60.62
5	80	$39.75	$9.20	$16.64	$0.00	$65.59

Notes:

** 1:3; 3:15; 1:10 thereafter / Steps are 1 yr.
Refrig/AC Mechanic **1:1;1:2;2:4;3:6;4:8;5:10;6:12;7:14;8:17;9:20;10:23(Max)

Apprentice to Journeyworker Ratio:**

PIPELAYER *LABORERS - ZONE 1*	12/01/2014	$34.85	$7.30	$12.95	$0.00	$55.10
	06/01/2015	$35.60	$7.30	$12.95	$0.00	$55.85
	12/01/2015	$36.35	$7.30	$12.95	$0.00	$56.60
	06/01/2016	$37.10	$7.30	$12.95	$0.00	$57.35
	12/01/2016	$38.10	$7.30	$12.95	$0.00	$58.35
For apprentice rates see "Apprentice- LABORER"						
PLUMBERS & GASFITTERS *PLUMBERS & GASFITTERS LOCAL 12*	09/01/2014	$49.66	$10.32	$14.54	$0.00	$74.52
	03/01/2015	$50.66	$10.32	$14.54	$0.00	$75.52
	09/01/2015	$51.66	$10.32	$14.54	$0.00	$76.52
	03/01/2016	$52.81	$10.32	$14.54	$0.00	$77.67
	09/01/2016	$53.86	$10.32	$14.54	$0.00	$78.72
	03/01/2017	$54.86	$10.32	$14.54	$0.00	$79.72

Classification	Effective Date	Base Wage	Health	Pension	Supplemental Unemployment	Total Rate

Apprentice - *PLUMBER/GASFITTER - Local 12*

Effective Date - 09/01/2014

Step	percent	Apprentice Base Wage	Health	Pension	Supplemental Unemployment	Total Rate
1	35	$17.38	$10.32	$5.42	$0.00	$33.12
2	40	$19.86	$10.32	$6.13	$0.00	$36.31
3	55	$27.31	$10.32	$8.23	$0.00	$45.86
4	65	$32.28	$10.32	$9.64	$0.00	$52.24
5	75	$37.25	$10.32	$11.04	$0.00	$58.61

Effective Date - 03/01/2015

Step	percent	Apprentice Base Wage	Health	Pension	Supplemental Unemployment	Total Rate
1	35	$17.73	$10.32	$5.42	$0.00	$33.47
2	40	$20.26	$10.32	$6.11	$0.00	$36.69
3	55	$27.86	$10.32	$8.22	$0.00	$46.40
4	65	$32.93	$10.32	$9.62	$0.00	$52.87
5	75	$38.00	$10.32	$11.03	$0.00	$59.35

Notes:

** 1:2; 2:6; 3:10; 4:14; 5:19/Steps are 1 yr
Step4 with lic$55.42 Step5 with lic$61.79

Apprentice to Journeyworker Ratio:**

PNEUMATIC CONTROLS (TEMP.) *PIPEFITTERS LOCAL 537*	09/01/2014	$48.69	$9.20	$16.64	$0.00	$74.53
	03/01/2015	$49.69	$9.20	$16.64	$0.00	$75.53
	09/01/2015	$50.69	$9.20	$16.64	$0.00	$76.53
	03/01/2016	$51.69	$9.20	$16.64	$0.00	$77.53
	09/01/2016	$52.69	$9.20	$16.64	$0.00	$78.53
	03/01/2017	$53.69	$9.20	$16.64	$0.00	$79.53
For apprentice rates see "Apprentice- PIPEFITTER" or "PLUMBER/PIPEFITTER"						
PNEUMATIC DRILL/TOOL OPERATOR *LABORERS - ZONE 1*	12/01/2014	$34.85	$7.30	$12.95	$0.00	$55.10
	06/01/2015	$35.60	$7.30	$12.95	$0.00	$55.85
	12/01/2015	$36.35	$7.30	$12.95	$0.00	$56.60
	06/01/2016	$37.10	$7.30	$12.95	$0.00	$57.35
	12/01/2016	$38.10	$7.30	$12.95	$0.00	$58.35
For apprentice rates see "Apprentice- LABORER"						
POWDERMAN & BLASTER *LABORERS - ZONE 1*	12/01/2014	$35.60	$7.30	$12.95	$0.00	$55.85
	06/01/2015	$36.35	$7.30	$12.95	$0.00	$56.60
	12/01/2015	$37.10	$7.30	$12.95	$0.00	$57.35
	06/01/2016	$37.85	$7.30	$12.95	$0.00	$58.10
	12/01/2016	$38.85	$7.30	$12.95	$0.00	$59.10
For apprentice rates see "Apprentice- LABORER"						

Classification	Effective Date	Base Wage	Health	Pension	Supplemental Unemployment	Total Rate
POWER SHOVEL/DERRICK/TRENCHING MACHINE *OPERATING ENGINEERS LOCAL 4*	12/01/2014	$42.39	$10.00	$14.30	$0.00	$66.69
	06/01/2015	$43.14	$10.00	$14.30	$0.00	$67.44
	12/01/2015	$44.39	$10.00	$14.30	$0.00	$68.69
	06/01/2016	$45.14	$10.00	$14.30	$0.00	$69.44
	12/01/2016	$46.39	$10.00	$14.30	$0.00	$70.69
	06/01/2017	$47.39	$10.00	$14.30	$0.00	$71.69
	12/01/2017	$48.39	$10.00	$14.30	$0.00	$72.69
For apprentice rates see "Apprentice- OPERATING ENGINEERS"						
PUMP OPERATOR (CONCRETE) *OPERATING ENGINEERS LOCAL 4*	12/01/2014	$42.39	$10.00	$14.30	$0.00	$66.69
	06/01/2015	$43.14	$10.00	$14.30	$0.00	$67.44
	12/01/2015	$44.39	$10.00	$14.30	$0.00	$68.69
	06/01/2016	$45.14	$10.00	$14.30	$0.00	$69.44
	12/01/2016	$46.39	$10.00	$14.30	$0.00	$70.69
	06/01/2017	$47.39	$10.00	$14.30	$0.00	$71.69
	12/01/2017	$48.39	$10.00	$14.30	$0.00	$72.69
For apprentice rates see "Apprentice- OPERATING ENGINEERS"						
PUMP OPERATOR (DEWATERING, OTHER) *OPERATING ENGINEERS LOCAL 4*	12/01/2014	$29.40	$10.00	$14.30	$0.00	$53.70
	06/01/2015	$29.92	$10.00	$14.30	$0.00	$54.22
	12/01/2015	$30.79	$10.00	$14.30	$0.00	$55.09
	06/01/2016	$31.31	$10.00	$14.30	$0.00	$55.61
	12/01/2016	$32.18	$10.00	$14.30	$0.00	$56.48
	06/01/2017	$32.87	$10.00	$14.30	$0.00	$57.17
	12/01/2017	$33.56	$10.00	$14.30	$0.00	$57.86
For apprentice rates see "Apprentice- OPERATING ENGINEERS"						
READY MIX CONCRETE DRIVERS after 4/30/10 (Drivers Hired After 4/30/2010) *TEAMSTERS LOCAL 25b*	07/01/2014	$27.73	$7.73	$8.65	$0.00	$44.11
	05/01/2015	$27.88	$7.73	$8.92	$0.00	$44.53
	07/01/2015	$27.88	$7.98	$8.92	$0.00	$44.78
	05/01/2016	$28.03	$7.98	$9.31	$0.00	$45.32
	07/01/2016	$28.03	$8.23	$9.31	$0.00	$45.57
	05/01/2017	$28.18	$8.23	$9.72	$0.00	$46.13
	07/01/2017	$28.18	$8.48	$9.72	$0.00	$46.38
READY-MIX CONCRETE DRIVER *TEAMSTERS LOCAL 25b*	07/01/2014	$29.03	$7.73	$8.65	$0.00	$45.41
	05/01/2015	$29.18	$7.73	$8.92	$0.00	$45.83
	07/01/2015	$29.18	$7.98	$8.92	$0.00	$46.08
	05/01/2016	$29.33	$7.98	$9.31	$0.00	$46.62
	07/01/2016	$29.33	$8.23	$9.31	$0.00	$46.87
	05/01/2017	$29.48	$8.23	$9.72	$0.00	$47.43
	07/01/2017	$29.48	$8.48	$9.72	$0.00	$47.68
RECLAIMERS *OPERATING ENGINEERS LOCAL 4*	12/01/2014	$41.99	$10.00	$14.30	$0.00	$66.29
	06/01/2015	$42.73	$10.00	$14.30	$0.00	$67.03
	12/01/2015	$43.97	$10.00	$14.30	$0.00	$68.27
	06/01/2016	$44.72	$10.00	$14.30	$0.00	$69.02
	12/01/2016	$45.95	$10.00	$14.30	$0.00	$70.25
	06/01/2017	$46.94	$10.00	$14.30	$0.00	$71.24
	12/01/2017	$47.93	$10.00	$14.30	$0.00	$72.23
For apprentice rates see "Apprentice- OPERATING ENGINEERS"						

Classification	Effective Date	Base Wage	Health	Pension	Supplemental Unemployment	Total Rate
RESIDENTIAL WOOD FRAME (All Other Work) *CARPENTERS -ZONE 1 (Residential Wood)*	04/01/2011	$37.25	$8.67	$15.51	$0.00	$61.43
RESIDENTIAL WOOD FRAME CARPENTER ** ** The Residential Wood Frame Carpenter classification applies only to the construction of new, wood frame residences that do not exceed four stories including the basement.*CARPENTERS -ZONE 1 (Residential Wood)*	05/01/2011	$27.49	$6.34	$6.23	$0.00	$40.06

As of 9/1/09 Carpentry work on wood-frame residential WEATHERIZATION projects shall be paid the RESIDENTIAL WOOD FRAME CARPENTER rate.

Apprentice - *CARPENTER (Residential Wood Frame) - Zone 1*

Effective Date - 05/01/2011

Step	percent	Apprentice Base Wage	Health	Pension	Supplemental Unemployment	Total Rate
1	60	$16.49	$6.34	$0.00	$0.00	$22.83
2	60	$16.49	$6.34	$6.23	$0.00	$29.06
3	65	$17.87	$6.34	$6.23	$0.00	$30.44
4	70	$19.24	$6.34	$6.23	$0.00	$31.81
5	75	$20.62	$6.34	$6.23	$0.00	$33.19
6	80	$21.99	$6.34	$6.23	$0.00	$34.56
7	85	$23.37	$6.34	$6.23	$0.00	$35.94
8	90	$24.74	$6.34	$6.23	$0.00	$37.31

Notes:

Apprentice to Journeyworker Ratio:1:5

RIDE-ON MOTORIZED BUGGY OPERATOR *LABORERS - ZONE 1*	12/01/2014	$34.85	$7.30	$12.95	$0.00	$55.10
	06/01/2015	$35.60	$7.30	$12.95	$0.00	$55.85
	12/01/2015	$36.35	$7.30	$12.95	$0.00	$56.60
	06/01/2016	$37.10	$7.30	$12.95	$0.00	$57.35
	12/01/2016	$38.10	$7.30	$12.95	$0.00	$58.35
For apprentice rates see "Apprentice- LABORER"						
ROLLER/SPREADER/MULCHING MACHINE *OPERATING ENGINEERS LOCAL 4*	12/01/2014	$41.99	$10.00	$14.30	$0.00	$66.29
	06/01/2015	$42.73	$10.00	$14.30	$0.00	$67.03
	12/01/2015	$43.97	$10.00	$14.30	$0.00	$68.27
	06/01/2016	$44.72	$10.00	$14.30	$0.00	$69.02
	12/01/2016	$45.95	$10.00	$14.30	$0.00	$70.25
	06/01/2017	$46.94	$10.00	$14.30	$0.00	$71.24
	12/01/2017	$47.93	$10.00	$14.30	$0.00	$72.23
For apprentice rates see "Apprentice- OPERATING ENGINEERS"						
ROOFER (Inc.Roofer Waterproofng &Roofer Damproofg) *ROOFERS LOCAL 33*	02/01/2015	$40.11	$10.50	$11.60	$0.00	$62.21
	08/01/2015	$41.01	$10.50	$11.60	$0.00	$63.11
	02/01/2016	$41.91	$10.50	$11.60	$0.00	$64.01

Classification	Effective Date	Base Wage	Health	Pension	Supplemental Unemployment	Total Rate

Apprentice - *ROOFER - Local 33*

Effective Date - 02/01/2015

Step	percent	Apprentice Base Wage	Health	Pension	Supplemental Unemployment	Total Rate
1	50	$20.06	$10.50	$3.38	$0.00	$33.94
2	60	$24.07	$10.50	$11.60	$0.00	$46.17
3	65	$26.07	$10.50	$11.60	$0.00	$48.17
4	75	$30.08	$10.50	$11.60	$0.00	$52.18
5	85	$34.09	$10.50	$11.60	$0.00	$56.19

Effective Date - 08/01/2015

Step	percent	Apprentice Base Wage	Health	Pension	Supplemental Unemployment	Total Rate
1	50	$20.51	$10.50	$3.38	$0.00	$34.39
2	60	$24.61	$10.50	$11.60	$0.00	$46.71
3	65	$26.66	$10.50	$11.60	$0.00	$48.76
4	75	$30.76	$10.50	$11.60	$0.00	$52.86
5	85	$34.86	$10.50	$11.60	$0.00	$56.96

Notes: ** 1:5, 2:6-10, the 1:10; Reroofing: 1:4, then 1:1
Step 1 is 2000 hrs.; Steps 2-5 are 1000 hrs.

Apprentice to Journeyworker Ratio:**

ROOFER SLATE / TILE / PRECAST CONCRETE *ROOFERS LOCAL 33*	02/01/2015	$40.36	$10.50	$11.60	$0.00	$62.46
	08/01/2015	$41.26	$10.50	$11.60	$0.00	$63.36
	02/01/2016	$42.16	$10.50	$11.60	$0.00	$64.26
For apprentice rates see "Apprentice- ROOFER"						
SHEETMETAL WORKER *SHEETMETAL WORKERS LOCAL 17 - A*	02/01/2015	$43.69	$9.82	$20.54	$2.19	$76.24
	08/01/2015	$44.69	$9.82	$20.54	$2.19	$77.24
	02/01/2016	$45.69	$9.82	$20.54	$2.19	$78.24
	08/01/2016	$46.84	$9.82	$20.54	$2.19	$79.39
	02/01/2017	$47.94	$9.82	$20.54	$2.19	$80.49
	08/01/2017	$49.04	$9.82	$20.54	$2.19	$81.59
	02/01/2018	$50.19	$9.82	$20.54	$2.19	$82.74

Classification	Effective Date	Base Wage	Health	Pension	Supplemental Unemployment	Total Rate

Apprentice - *SHEET METAL WORKER - Local 17-A*

Effective Date - 02/01/2015

Step	percent	Apprentice Base Wage	Health	Pension	Supplemental Unemployment	Total Rate
1	40	$17.48	$9.82	$4.58	$0.00	$31.88
2	40	$17.48	$9.82	$4.58	$0.00	$31.88
3	45	$19.66	$9.82	$9.09	$1.16	$39.73
4	45	$19.66	$9.82	$9.09	$1.16	$39.73
5	50	$21.85	$9.82	$9.91	$1.25	$42.83
6	50	$21.85	$9.82	$10.16	$1.25	$43.08
7	60	$26.21	$9.82	$11.55	$1.43	$49.01
8	65	$28.40	$9.82	$12.38	$1.52	$52.12
9	75	$32.77	$9.82	$14.02	$1.70	$58.31
10	85	$37.14	$9.82	$15.16	$1.86	$63.98

Effective Date - 08/01/2015

Step	percent	Apprentice Base Wage	Health	Pension	Supplemental Unemployment	Total Rate
1	40	$17.88	$9.82	$4.58	$0.00	$32.28
2	40	$17.88	$9.82	$4.58	$0.00	$32.28
3	45	$20.11	$9.82	$9.09	$1.17	$40.19
4	45	$20.11	$9.82	$9.09	$1.17	$40.19
5	50	$22.35	$9.82	$9.91	$1.26	$43.34
6	50	$22.35	$9.82	$10.16	$1.27	$43.60
7	60	$26.81	$9.82	$11.55	$1.45	$49.63
8	65	$29.05	$9.82	$12.38	$1.54	$52.79
9	75	$33.52	$9.82	$14.02	$1.72	$59.08
10	85	$37.99	$9.82	$15.16	$1.89	$64.86

Notes:

Steps are 6 mos.

Apprentice to Journeyworker Ratio:1:4

SIGN ERECTOR *PAINTERS LOCAL 35 - ZONE 1*	06/01/2013	$25.81	$7.07	$7.05	$0.00	$39.93

Classification	Effective Date	Base Wage	Health	Pension	Supplemental Unemployment	Total Rate

Apprentice - *SIGN ERECTOR - Local 35 Zone 1*

Effective Date - 06/01/2013

Step	percent	Apprentice Base Wage	Health	Pension	Supplemental Unemployment	Total Rate
1	50	$12.91	$7.07	$0.00	$0.00	$19.98
2	55	$14.20	$7.07	$2.45	$0.00	$23.72
3	60	$15.49	$7.07	$2.45	$0.00	$25.01
4	65	$16.78	$7.07	$2.45	$0.00	$26.30
5	70	$18.07	$7.07	$7.05	$0.00	$32.19
6	75	$19.36	$7.07	$7.05	$0.00	$33.48
7	80	$20.65	$7.07	$7.05	$0.00	$34.77
8	85	$21.94	$7.07	$7.05	$0.00	$36.06
9	90	$23.23	$7.07	$7.05	$0.00	$37.35

Notes:

Steps are 4 mos.

Apprentice to Journeyworker Ratio:1:1

SPECIALIZED EARTH MOVING EQUIP < 35 TONS *TEAMSTERS JOINT COUNCIL NO. 10 ZONE A*	12/01/2014	$32.69	$9.91	$9.33	$0.00	$51.93
	06/01/2015	$33.04	$9.91	$9.33	$0.00	$52.28
	08/01/2015	$33.04	$10.41	$9.33	$0.00	$52.78
	12/01/2015	$33.04	$10.41	$10.08	$0.00	$53.53
	06/01/2016	$33.54	$10.41	$10.08	$0.00	$54.03
	08/01/2016	$33.54	$10.91	$10.08	$0.00	$54.53
	12/01/2016	$33.54	$10.91	$10.89	$0.00	$55.34
SPECIALIZED EARTH MOVING EQUIP > 35 TONS *TEAMSTERS JOINT COUNCIL NO. 10 ZONE A*	12/01/2014	$32.98	$9.91	$9.33	$0.00	$52.22
	06/01/2015	$33.33	$9.91	$9.33	$0.00	$52.57
	08/01/2015	$33.33	$10.41	$9.33	$0.00	$53.07
	12/01/2015	$33.33	$10.41	$10.08	$0.00	$53.82
	06/01/2016	$33.83	$10.41	$10.08	$0.00	$54.32
	08/01/2016	$33.83	$10.91	$10.08	$0.00	$54.82
	12/01/2016	$33.83	$10.91	$10.89	$0.00	$55.63
SPRINKLER FITTER *SPRINKLER FITTERS LOCAL 550 - (Section A) Zone 1*	01/01/2015	$53.58	$8.42	$14.75	$0.00	$76.75
	03/01/2015	$54.58	$8.42	$14.75	$0.00	$77.75
	10/01/2015	$55.73	$8.42	$14.75	$0.00	$78.90
	01/01/2016	$55.73	$8.67	$14.90	$0.00	$79.30
	03/01/2016	$56.73	$8.67	$14.90	$0.00	$80.30
	10/01/2016	$57.88	$8.67	$14.90	$0.00	$81.45
	03/01/2017	$58.88	$8.67	$14.90	$0.00	$82.45

Classification	Effective Date	Base Wage	Health	Pension	Supplemental Unemployment	Total Rate

Apprentice - *SPRINKLER FITTER - Local 550 (Section A) Zone 1*

Effective Date - 01/01/2015

Step	percent	Apprentice Base Wage	Health	Pension	Supplemental Unemployment	Total Rate
1	35	$18.75	$8.42	$8.40	$0.00	$35.57
2	40	$21.43	$8.42	$8.40	$0.00	$38.25
3	45	$24.11	$8.42	$8.40	$0.00	$40.93
4	50	$26.79	$8.42	$8.40	$0.00	$43.61
5	55	$29.47	$8.42	$8.40	$0.00	$46.29
6	60	$32.15	$8.42	$8.40	$0.00	$48.97
7	65	$34.83	$8.42	$8.40	$0.00	$51.65
8	70	$37.51	$8.42	$8.40	$0.00	$54.33
9	75	$40.19	$8.42	$8.40	$0.00	$57.01
10	80	$42.86	$8.42	$8.40	$0.00	$59.68

Effective Date - 03/01/2015

Step	percent	Apprentice Base Wage	Health	Pension	Supplemental Unemployment	Total Rate
1	35	$19.10	$8.42	$8.40	$0.00	$35.92
2	40	$21.83	$8.42	$8.40	$0.00	$38.65
3	45	$24.56	$8.42	$8.40	$0.00	$41.38
4	50	$27.29	$8.42	$8.40	$0.00	$44.11
5	55	$30.02	$8.42	$8.40	$0.00	$46.84
6	60	$32.75	$8.42	$8.40	$0.00	$49.57
7	65	$35.48	$8.42	$8.40	$0.00	$52.30
8	70	$38.21	$8.42	$8.40	$0.00	$55.03
9	75	$40.94	$8.42	$8.40	$0.00	$57.76
10	80	$43.66	$8.42	$8.40	$0.00	$60.48

Notes: Apprentice entered prior 9/30/10:
40/45/50/55/60/65/70/75/80/85
Steps are 850 hours

Apprentice to Journeyworker Ratio:1:3

STEAM BOILER OPERATOR *OPERATING ENGINEERS LOCAL 4*	12/01/2014	$41.99	$10.00	$14.30	$0.00	$66.29
	06/01/2015	$42.73	$10.00	$14.30	$0.00	$67.03
	12/01/2015	$43.97	$10.00	$14.30	$0.00	$68.27
	06/01/2016	$44.72	$10.00	$14.30	$0.00	$69.02
	12/01/2016	$45.95	$10.00	$14.30	$0.00	$70.25
	06/01/2017	$46.94	$10.00	$14.30	$0.00	$71.24
	12/01/2017	$47.93	$10.00	$14.30	$0.00	$72.23

For apprentice rates see "Apprentice- OPERATING ENGINEERS"

Classification	Effective Date	Base Wage	Health	Pension	Supplemental Unemployment	Total Rate
TAMPERS, SELF-PROPELLED OR TRACTOR DRAWN *OPERATING ENGINEERS LOCAL 4*	12/01/2014	$41.99	$10.00	$14.30	$0.00	$66.29
	06/01/2015	$42.73	$10.00	$14.30	$0.00	$67.03
	12/01/2015	$43.97	$10.00	$14.30	$0.00	$68.27
	06/01/2016	$44.72	$10.00	$14.30	$0.00	$69.02
	12/01/2016	$45.95	$10.00	$14.30	$0.00	$70.25
	06/01/2017	$46.94	$10.00	$14.30	$0.00	$71.24
	12/01/2017	$47.93	$10.00	$14.30	$0.00	$72.23
For apprentice rates see "Apprentice- OPERATING ENGINEERS"						
TELECOMMUNICATION TECHNICIAN *ELECTRICIANS LOCAL 103*	09/01/2014	$33.59	$13.00	$13.36	$0.00	$59.95
	03/01/2015	$33.88	$13.00	$13.70	$0.00	$60.58
	09/01/2015	$34.60	$13.00	$13.72	$0.00	$61.32
	03/01/2016	$35.31	$13.00	$13.74	$0.00	$62.05

Apprentice - *TELECOMMUNICATION TECHNICIAN - Local 103*

Effective Date - 09/01/2014

Step	percent	Apprentice Base Wage	Health	Pension	Supplemental Unemployment	Total Rate
1	40	$13.44	$13.00	$0.40	$0.00	$26.84
2	40	$13.44	$13.00	$0.40	$0.00	$26.84
3	45	$15.12	$13.00	$10.57	$0.00	$38.69
4	45	$15.12	$13.00	$10.57	$0.00	$38.69
5	50	$16.80	$13.00	$10.83	$0.00	$40.63
6	55	$18.47	$13.00	$11.08	$0.00	$42.55
7	60	$20.15	$13.00	$11.33	$0.00	$44.48
8	65	$21.83	$13.00	$11.59	$0.00	$46.42
9	70	$23.51	$13.00	$11.85	$0.00	$48.36
10	75	$25.19	$13.00	$12.10	$0.00	$50.29

Effective Date - 03/01/2015

Step	percent	Apprentice Base Wage	Health	Pension	Supplemental Unemployment	Total Rate
1	40	$13.55	$13.00	$0.41	$0.00	$26.96
2	40	$13.55	$13.00	$0.41	$0.00	$26.96
3	45	$15.25	$13.00	$10.87	$0.00	$39.12
4	45	$15.25	$13.00	$10.87	$0.00	$39.12
5	50	$16.94	$13.00	$11.11	$0.00	$41.05
6	55	$18.63	$13.00	$11.38	$0.00	$43.01
7	60	$20.33	$13.00	$11.64	$0.00	$44.97
8	65	$22.02	$13.00	$11.89	$0.00	$46.91
9	70	$23.72	$13.00	$12.15	$0.00	$48.87
10	75	$25.41	$13.00	$12.41	$0.00	$50.82

Notes:

Apprentice to Journeyworker Ratio:1:1

Classification	Effective Date	Base Wage	Health	Pension	Supplemental Unemployment	Total Rate
TERRAZZO FINISHERS *BRICKLAYERS LOCAL 3 - MARBLE & TILE*	02/01/2015	$47.90	$10.18	$18.50	$0.00	$76.58
	08/01/2015	$48.80	$10.18	$18.57	$0.00	$77.55
	02/01/2016	$49.37	$10.18	$18.57	$0.00	$78.12
	08/01/2016	$50.27	$10.18	$18.65	$0.00	$79.10
	02/01/2017	$50.84	$10.18	$18.65	$0.00	$79.67

Apprentice - *TERRAZZO FINISHER - Local 3 Marble & Tile*

Effective Date - 02/01/2015

Step	percent	Apprentice Base Wage	Health	Pension	Supplemental Unemployment	Total Rate
1	50	$23.95	$10.18	$18.50	$0.00	$52.63
2	60	$28.74	$10.18	$18.50	$0.00	$57.42
3	70	$33.53	$10.18	$18.50	$0.00	$62.21
4	80	$38.32	$10.18	$18.50	$0.00	$67.00
5	90	$43.11	$10.18	$18.50	$0.00	$71.79

Effective Date - 08/01/2015

Step	percent	Apprentice Base Wage	Health	Pension	Supplemental Unemployment	Total Rate
1	50	$24.40	$10.18	$18.57	$0.00	$53.15
2	60	$29.28	$10.18	$18.57	$0.00	$58.03
3	70	$34.16	$10.18	$18.57	$0.00	$62.91
4	80	$39.04	$10.18	$18.57	$0.00	$67.79
5	90	$43.92	$10.18	$18.57	$0.00	$72.67

Notes:

Apprentice to Journeyworker Ratio:1:3

TEST BORING DRILLER *LABORERS - FOUNDATION AND MARINE*	12/01/2014	$35.95	$7.30	$13.15	$0.00	$56.40
	06/01/2015	$36.70	$7.30	$13.15	$0.00	$57.15
	12/01/2015	$37.45	$7.30	$13.15	$0.00	$57.90
	06/01/2016	$38.20	$7.30	$13.15	$0.00	$58.65
	12/01/2016	$39.20	$7.30	$13.15	$0.00	$59.65
For apprentice rates see "Apprentice- LABORER"						
TEST BORING DRILLER HELPER *LABORERS - FOUNDATION AND MARINE*	12/01/2014	$34.67	$7.30	$13.15	$0.00	$55.12
	06/01/2015	$35.42	$7.30	$13.15	$0.00	$55.87
	12/01/2015	$36.17	$7.30	$13.15	$0.00	$56.62
	06/01/2016	$36.92	$7.30	$13.15	$0.00	$57.37
	12/01/2016	$37.92	$7.30	$13.15	$0.00	$58.37
For apprentice rates see "Apprentice- LABORER"						
TEST BORING LABORER *LABORERS - FOUNDATION AND MARINE*	12/01/2014	$34.55	$7.30	$13.15	$0.00	$55.00
	06/01/2015	$35.30	$7.30	$13.15	$0.00	$55.75
	12/01/2015	$36.05	$7.30	$13.15	$0.00	$56.50
	06/01/2016	$36.80	$7.30	$13.15	$0.00	$57.25
	12/01/2016	$37.80	$7.30	$13.15	$0.00	$58.25
For apprentice rates see "Apprentice- LABORER"						

Classification	Effective Date	Base Wage	Health	Pension	Supplemental Unemployment	Total Rate
TRACTORS/PORTABLE STEAM GENERATORS *OPERATING ENGINEERS LOCAL 4*	12/01/2014	$41.99	$10.00	$14.30	$0.00	$66.29
	06/01/2015	$42.73	$10.00	$14.30	$0.00	$67.03
	12/01/2015	$43.97	$10.00	$14.30	$0.00	$68.27
	06/01/2016	$44.72	$10.00	$14.30	$0.00	$69.02
	12/01/2016	$45.95	$10.00	$14.30	$0.00	$70.25
	06/01/2017	$46.94	$10.00	$14.30	$0.00	$71.24
	12/01/2017	$47.93	$10.00	$14.30	$0.00	$72.23
For apprentice rates see "Apprentice- OPERATING ENGINEERS"						
TRAILERS FOR EARTH MOVING EQUIPMENT *TEAMSTERS JOINT COUNCIL NO. 10 ZONE A*	12/01/2014	$33.27	$9.91	$9.33	$0.00	$52.51
	06/01/2015	$33.62	$9.91	$9.33	$0.00	$52.86
	08/01/2015	$33.62	$10.41	$9.33	$0.00	$53.36
	12/01/2015	$33.62	$10.41	$10.08	$0.00	$54.11
	06/01/2016	$34.12	$10.41	$10.08	$0.00	$54.61
	08/01/2016	$34.12	$10.91	$10.08	$0.00	$55.11
	12/01/2016	$34.12	$10.91	$10.89	$0.00	$55.92
TUNNEL WORK - COMPRESSED AIR *LABORERS (COMPRESSED AIR)*	12/01/2014	$46.83	$7.30	$13.55	$0.00	$67.68
	06/01/2015	$47.58	$7.30	$13.55	$0.00	$68.43
	12/01/2015	$48.33	$7.30	$13.55	$0.00	$69.18
	06/01/2016	$49.08	$7.30	$13.55	$0.00	$69.93
	12/01/2016	$50.08	$7.30	$13.55	$0.00	$70.93
For apprentice rates see "Apprentice- LABORER"						
TUNNEL WORK - COMPRESSED AIR (HAZ. WASTE) *LABORERS (COMPRESSED AIR)*	12/01/2014	$48.83	$7.30	$13.55	$0.00	$69.68
	06/01/2015	$49.58	$7.30	$13.55	$0.00	$70.43
	12/01/2015	$50.33	$7.30	$13.55	$0.00	$71.18
	06/01/2016	$51.08	$7.30	$13.55	$0.00	$71.93
	12/01/2016	$52.08	$7.30	$13.55	$0.00	$72.93
For apprentice rates see "Apprentice- LABORER"						
TUNNEL WORK - FREE AIR *LABORERS (FREE AIR TUNNEL)*	12/01/2014	$38.90	$7.30	$13.55	$0.00	$59.75
	06/01/2015	$39.65	$7.30	$13.55	$0.00	$60.50
	12/01/2015	$40.40	$7.30	$13.55	$0.00	$61.25
	06/01/2016	$41.15	$7.30	$13.55	$0.00	$62.00
	12/01/2016	$42.15	$7.30	$13.55	$0.00	$63.00
For apprentice rates see "Apprentice- LABORER"						
TUNNEL WORK - FREE AIR (HAZ. WASTE) *LABORERS (FREE AIR TUNNEL)*	12/01/2014	$40.90	$7.30	$13.55	$0.00	$61.75
	06/01/2015	$41.65	$7.30	$13.55	$0.00	$62.50
	12/01/2015	$42.40	$7.30	$13.55	$0.00	$63.25
	06/01/2016	$43.15	$7.30	$13.55	$0.00	$64.00
	12/01/2016	$44.15	$7.30	$13.55	$0.00	$65.00
For apprentice rates see "Apprentice- LABORER"						
VAC-HAUL *TEAMSTERS JOINT COUNCIL NO. 10 ZONE A*	12/01/2014	$32.69	$9.91	$9.33	$0.00	$51.93
	06/01/2015	$33.04	$9.91	$9.33	$0.00	$52.28
	08/01/2015	$33.04	$10.41	$9.33	$0.00	$52.78
	12/01/2015	$33.04	$10.41	$10.08	$0.00	$53.53
	06/01/2016	$33.54	$10.41	$10.08	$0.00	$54.03
	08/01/2016	$33.54	$10.91	$10.08	$0.00	$54.53
	12/01/2016	$33.54	$10.91	$10.89	$0.00	$55.34

Classification	Effective Date	Base Wage	Health	Pension	Supplemental Unemployment	Total Rate
WAGON DRILL OPERATOR *LABORERS - ZONE 1*	12/01/2014	$34.85	$7.30	$12.95	$0.00	$55.10
	06/01/2015	$35.60	$7.30	$12.95	$0.00	$55.85
	12/01/2015	$36.35	$7.30	$12.95	$0.00	$56.60
	06/01/2016	$37.10	$7.30	$12.95	$0.00	$57.35
	12/01/2016	$38.10	$7.30	$12.95	$0.00	$58.35
For apprentice rates see "Apprentice- LABORER"						
WASTE WATER PUMP OPERATOR *OPERATING ENGINEERS LOCAL 4*	12/01/2014	$42.39	$10.00	$14.30	$0.00	$66.69
	06/01/2015	$43.14	$10.00	$14.30	$0.00	$67.44
	12/01/2015	$44.39	$10.00	$14.30	$0.00	$68.69
	06/01/2016	$45.14	$10.00	$14.30	$0.00	$69.44
	12/01/2016	$46.39	$10.00	$14.30	$0.00	$70.69
	06/01/2017	$47.39	$10.00	$14.30	$0.00	$71.69
	12/01/2017	$48.39	$10.00	$14.30	$0.00	$72.69
For apprentice rates see "Apprentice- OPERATING ENGINEERS"						
WATER METER INSTALLER *PLUMBERS & GASFITTERS LOCAL 12*	09/01/2014	$49.66	$10.32	$14.54	$0.00	$74.52
	03/01/2015	$50.66	$10.32	$14.54	$0.00	$75.52
	09/01/2015	$51.66	$10.32	$14.54	$0.00	$76.52
	03/01/2016	$52.81	$10.32	$14.54	$0.00	$77.67
	09/01/2016	$53.86	$10.32	$14.54	$0.00	$78.72
	03/01/2017	$54.86	$10.32	$14.54	$0.00	$79.72
For apprentice rates see "Apprentice- PLUMBER/PIPEFITTER" or "PLUMBER/GASFITTER"						
Outside Electrical - East						
CABLE TECHNICIAN (Power Zone) *OUTSIDE ELECTRICAL WORKERS - EAST LOCAL 104*	09/01/2013	$25.66	$8.70	$4.48	$0.00	$38.84
For apprentice rates see "Apprentice- LINEMAN"						
CABLEMAN (Underground Ducts & Cables) *OUTSIDE ELECTRICAL WORKERS - EAST LOCAL 104*	09/01/2013	$36.55	$8.70	$6.58	$0.00	$51.83
For apprentice rates see "Apprentice- LINEMAN"						
DRIVER / GROUNDMAN CDL *OUTSIDE ELECTRICAL WORKERS - EAST LOCAL 104*	09/01/2013	$29.94	$8.70	$6.05	$0.00	$44.69
For apprentice rates see "Apprentice- LINEMAN"						
DRIVER / GROUNDMAN -Inexperienced (<2000 Hrs) *OUTSIDE ELECTRICAL WORKERS - EAST LOCAL 104*	09/01/2013	$23.52	$8.70	$5.24	$0.00	$37.46
For apprentice rates see "Apprentice- LINEMAN"						
EQUIPMENT OPERATOR (Class A CDL) *OUTSIDE ELECTRICAL WORKERS - EAST LOCAL 104*	09/01/2013	$36.35	$8.70	$9.43	$0.00	$54.48
For apprentice rates see "Apprentice- LINEMAN"						
EQUIPMENT OPERATOR (Class B CDL) *OUTSIDE ELECTRICAL WORKERS - EAST LOCAL 104*	09/01/2013	$32.08	$8.70	$6.59	$0.00	$47.37
For apprentice rates see "Apprentice- LINEMAN"						
GROUNDMAN *OUTSIDE ELECTRICAL WORKERS - EAST LOCAL 104*	09/01/2013	$23.52	$8.70	$3.72	$0.00	$35.94
For apprentice rates see "Apprentice- LINEMAN"						
GROUNDMAN -Inexperienced (<2000 Hrs.) *OUTSIDE ELECTRICAL WORKERS - EAST LOCAL 104*	09/01/2013	$19.25	$8.70	$2.85	$0.00	$30.80
For apprentice rates see "Apprentice- LINEMAN"						
JOURNEYMAN LINEMAN *OUTSIDE ELECTRICAL WORKERS - EAST LOCAL 104*	09/01/2013	$42.77	$8.70	$11.78	$0.00	$63.25

Classification	Effective Date	Base Wage	Health	Pension	Supplemental Unemployment	Total Rate

Apprentice - *LINEMAN (Outside Electrical) - East Local 104*

Effective Date - 09/01/2013

Step	percent	Apprentice Base Wage	Health	Pension	Supplemental Unemployment	Total Rate
1	60	$25.66	$8.70	$4.24	$0.00	$38.60
2	65	$27.80	$8.70	$4.71	$0.00	$41.21
3	70	$29.94	$8.70	$5.43	$0.00	$44.07
4	75	$32.08	$8.70	$6.16	$0.00	$46.94
5	80	$34.22	$8.70	$6.88	$0.00	$49.80
6	85	$36.35	$8.70	$7.62	$0.00	$52.67
7	90	$38.49	$8.70	$8.83	$0.00	$56.02

Notes:

Apprentice to Journeyworker Ratio:1:2

TELEDATA CABLE SPLICER *OUTSIDE ELECTRICAL WORKERS - EAST LOCAL 104*	07/16/2012	$26.33	$4.18	$2.79	$0.00	$33.30
TELEDATA LINEMAN/EQUIPMENT OPERATOR *OUTSIDE ELECTRICAL WORKERS - EAST LOCAL 104*	07/16/2012	$24.78	$4.18	$2.74	$0.00	$31.70
TELEDATA WIREMAN/INSTALLER/TECHNICIAN *OUTSIDE ELECTRICAL WORKERS - EAST LOCAL 104*	07/16/2012	$24.78	$4.18	$2.74	$0.00	$31.70
TREE TRIMMER *OUTSIDE ELECTRICAL WORKERS - EAST LOCAL 104*	01/29/2012	$17.18	$3.37	$0.00	$0.00	$20.55

This classification applies only to tree work done: (a) for a utility company, R.E.A. cooperative, or railroad or coal mining company, and (b) for the purpose of operating, maintaining, or repairing the utility company's equipment, and (c) by a person who is using hand or mechanical cutting methods and is not on the ground. This classification does not apply to wholesale tree removal.

TREE TRIMMER GROUNDMAN *OUTSIDE ELECTRICAL WORKERS - EAST LOCAL 104*	01/29/2012	$15.15	$3.37	$0.00	$0.00	$18.52

This classification applies only to tree work done: (a) for a utility company, R.E.A. cooperative, or railroad or coal mining company, and (b) for the purpose of operating, maintaining, or repairing the utility company's equipment, and (c) by a person who is using hand or mechanical cutting methods and is on the ground. This classification does not apply to wholesale tree removal.

Additional Apprentice Information:

Minimum wage rates for apprentices employed on public works projects are listed above as a percentage of the pre-determined hourly wage rate established by the Commissioner under the provisions of the M.G.L. c. 149, ss. 26-27D. Apprentice ratios are established by the Division of Apprenticeship Training pursuant to M.G.L. c. 23, ss. 11E-11L.

All apprentices must be registered with the Division of Apprenticeship Training in accordance with M.G.L. c. 23, ss. 11E-11L.

All steps are six months (1000 hours.)
Ratios are expressed in allowable number of apprentices to journeymen or fraction thereof, unless otherwise specified.

** Multiple ratios are listed in the comment field.
*** APP to JM; 1:1, 2:2, 2:3, 3:4, 4:4, 4:5, 4:6, 5:7, 6:7, 6:8, 6:9, 7:10, 8:10, 8:11, 8:12, 9:13, 10:13, 10:14, etc.
**** APP to JM; 1:1, 1:2, 2:3, 2:4, 3:5, 4:6, 4:7, 5:8, 6:9, 6:10, 7:11, 8:12, 8:13, 9:14, 10:15, 10:16, etc.

ATTACHMENT B - (MBE/EEO/AA) POLICIES

THE COMMONWEALTH OF MASSACHUSETTS
SUPPLEMENTAL EQUAL EMPLOYMENT OPPORTUNITY, ANTI-DISCRIMINATION AND AFFIRMATIVE ACTION PROGRAM

1. Definitions

For purposes of this contract, "minority" refers to Asian-Americans, Blacks, Spanish Surname Americans, North American Indians, and Cape Verdeans. "Commission" refers to the Massachusetts Commission Against Discrimination.

II. Contractor's Agreement

During the performance of this Contract the Contractor and all of the Subcontractors, hereinafter collectively referred to as the Contractor, for himself, the assignees and successors in interest, agree as follows:

In connection with the performance of work under this contract, the Contractor, for himself, the assignees and successors in interest, agree as follows:

In connection with the performance of work under this contract, the contractor shall not discriminate against any employee or applicant for employment because of race, color, religious creed, national original, age or sex. The aforesaid provision shall include but not be limited to the following: employment upgrading, demotion or transfer; recruitment advertising; recruitment layoff; termination; rates of pay or other forms of compensation; conditions or privileges of employment; and selection for apprenticeship.

The Contractor shall post hereafter in conspicuous places, available for employees and applicants for employment, notices to be provided by the Commission setting forth the provisions of the Fair Employment Practices Law of the Commonwealth (M.G.L. Chapter 151B).

In connection with the performance of work under this contract, the Contractor, shall undertake in good faith affirmative action measures designed to eliminate any discriminatory barriers in the terms and conditions of employment on the grounds of race, color, religious creed, national origin, age or sex, and to eliminate and remedy any effects of such discrimination in the past. Such affirmative action shall entail positive and aggressive measure to ensure equal opportunity in the areas of hiring, upgrading, demotion or transfer, recruitment, layoff or termination, rate of compensation, and in-service or apprenticeship training programs. This affirmative action shall include all action required to guarantee equal employment opportunity for all persons, regardless of race, color, religious creed, national origin, age or sex. A purpose of this provision is to ensure to the fullest extent possible an adequate supply of skilled tradesmen for this and future Commonwealth public construction projects.

III. Remedial Action

As part of this obligation of remedial action under the foregoing section, the Contractor shall maintain on this project not less than the percent ratio of minority employee man hours to total man hours in each job category including but not limited bricklayers, carpenters, cement mason electricians, ironworkers, operating engineers, and those classes of work enumerated in Section 44C of Chapter 149 of the Massachusetts General Laws. The percentage ratio for this project is 5 percent.

In the hiring of minority journeymen, apprentices, trainees and advanced trainees, the Contractor shall rely on referrals from a multi-employer affirmative action program approved by the Commission's traditional referral methods utilized by the construction industry, and referrals from agencies, not more than three in number at any one time, designated by the Liaison Committee of the Commission.

IV. Records

At the discretion of the Commission there may be established for the life of the contract a body to be known as the Liaison Committee. The Liaison Committee shall be composed of one representative each from the agency or agencies administering this project, hereinafter called the administering agency, the Commission and such other representative as may be designated by the Commission in conjunction with the administering agency.

The Contractor or an agent designated by the Contractor as the on-site equal employment opportunity officer shall recognize the Liaison Committee as an affirmative action body, and shall establish a continuing working relationship with the Liaison Committee, consulting with the Liaison Committee on all matters related to minority recruitment, referral, employment and training.

The Contractor shall prepare projected manning tables on a quarterly basis. These shall be broken down into weekly projections of workers required in each trade. Copies shall be furnished one week in advance of the commencement of the period covered, and also when updated, to the Commission and Liaison Committee.

Records of employment referral orders, prepared by the Contractor, shall be made available to the Commission and Liaison Committee.

The Contractor shall prepare weekly reports in a form approved by the Commission of hours worked in each trade by each employee, identified as minority or non-minority. Copies of these shall be provided at the end of each such week to the Commission and to the Liaison Committee.

V. Affirmative Action in Negotiating with Minority Subcontractors

If the Contractor uses any subcontractor for any work performed under this contract, the Contractor shall take affirmative action to negotiate with qualified minority subcontractors. This affirmative action shall cover both pre-bid and post bid periods. It shall include notification to the Office of Minority Business Assistance (within the Executive Office of Communities and

Development) or its designee, while bids are in preparation, of all products, work or services for which the Contractor intends to negotiate bids.

VI Preference in Hiring

In the employment of journeymen, apprentices, trainees and advanced trainees, the Contractor shall give preference, first, to citizens of the Commonwealth who have served in the armed forces of the United States in time of war and have been honorably discharged there from or released for active duty therein, and who are qualified to perform the work to which the employment relates, and secondly, to citizens of the Commonwealth generally, and if such cannot be obtained in sufficient numbers, then to citizens of the United States.

The requirements of the above paragraph do not apply to any project, financed in whole or in part with Federal Funds.

VII. Access During Construction

A designee of the Commission and a designee of the Liaison Committee shall each have right of access to the construction site.

VIII. Compliance with Requirements

The Contractor shall comply with the provisions of Executive Order NO. 74, as amended by Executive Order No. 116 dated May 1, 1975, and of Chapter 151B as amended, of the Massachusetts General Laws, both of which are herein incorporated and made a part of this contract.

IX Non-Discrimination

The Contractor, in the performance of all work after award, and prior to completion of the contract work, will not discriminate on grounds of race, color, religious creed, national original, age or sex in employment practices, in the selection or retention of subcontractors, or in the procurement of materials and rentals of equipment.

X. Solicitations for Sub-Contracts, and for the Procurement of Materials and Equipment

In all solicitations either by competitive bidding or negotiation made by the Contractor either for work to be performed under a subcontract or for the procurement of materials or equipment, each potential subcontractor or supplier shall be notified in writing by the Contractor of the Contractor's obligations under this contract relative to non-discrimination and affirmative action.

XI. Compliance - Information, Reports and Sanctions

1. The Contractor will provide all information and reports required by the administering agency or the Commission on instruction issued by either of them and will permit access to its facilities an any books, records, accounts and other sources of information which

may be determined by the Commission to affect the employment of personnel. This provision shall apply only to information pertinent to the Commonwealth's supplementary affirmative action contract requirements. Where information required is in the exclusive possession of another who fails or refuses this information, the Contractor shall so certify to the administering agency or the Commission as appropriate and shall set forth what efforts have been made to obtain the information.

2. Whenever the administering agency, the Commission, or the Liaison Committee believes the General Contractor or any Subcontractor may not be operating in compliance with the terms of this Section, the Commission directly or through its designated agent shall conduct an appropriate investigation, and may confer with the parties, to determine if such Contractor is operating in compliance with the terms of this Section. If the Commissioner or its agent finds the General Contractor or any subcontractor not in compliance, it shall make a preliminary report of noncompliance, and notify such Contractor in writing of such steps, as will in the judgment of the Commission or its agent bring such Contractor into compliance. I the event that such Contractor fails or refuses to fully perform such steps, the Commission shall make a final report of non-compliance, and recommend to the administering agency the imposition of one or more of the sanctions listed below. If, however, the Commission believes the General contractor or any Subcontractor has taken or is taking every possible measure to achieve compliance, it shall not make a final report of non-compliance. Within fourteen days of receipt of the recommendations of the Commission, the administering agency shall move to impose one or more of the following sanctions, as it may deem appropriate to attain full land effective enforcement.

   a. The recovery by the administering agency from the General Contractor of 1/100 of 1% of the contract award price or $1000 whichever sum is greater in the nature of liquidated damages or, if a Subcontractor is in non-compliance, the recovery by the administering agency from the General Contractor, to be assessed by the General Contractor as back charge against the Subcontractor, of 1/10 of 1% of the subcontractor price, or $400 whichever sum is greater, in the nature of liquidated damages, for each week that such party fails or refuses to comply.

   b. The suspension of any payment or part thereof due under the contract until such time as the General Contractor or any Subcontract is able to demonstrate within a specified time his compliance with the terms of the contract.

   c. The termination, or cancellation, of the contract, in whole or in part, unless the general Contractor or any Subcontractor is able to demonstrate within a specified time his compliance with the terms of the contract.

   d. The denial of the General Contractor or any Subcontractor of the right to participate in any future contracts awarded by the administering agency for a period of up to three years.

3. If any time after the imposition of one or more of the above sanctions a Contractor is able to demonstrate compliance with this Section, a request may be made to the administering

agency, in consultation with the Commission, to suspend the sanctions conditionally pending a final determination by the Commission as to whether the Contractor is in compliance. Upon final determination of the Commission, the administering agency, based on the recommendation of the Commission, shall either lift the sanction or reimpose them.

4. Sanctions enumerated under Sections XI-2 shall not be imposed by the administering agency except after an adjudicatory proceeding, as that term is used in M.G.L. Chapter 30A, has been conducted. No investigation by the Commission or its agent shall be initiated without prior notice to the Contractor.

XII. Severability

The provisions of this section are severable, and if any of these provisions shall be held unconstitutional by any court of competent jurisdiction, the decision of such court shall not effect or impair any of the remaining provisions.

XIII. Bidder's Requirements

The bidder will comply with the minority manpower ratio and specific affirmative action steps contained herein. The bidder shall obtain from each of its subcontractors and submit to the contracting or administering agency prior to the award of any subcontract under this contract the subcontractor certification required by these bid conditions.

XIV. Subcontractors' Certification

Prior to the award for any subcontract under this Notice to Contractors, regardless of tier, the prospective subcontractor must execute and submit to the Prime Contractor the following certification, which will be deemed a part of the resulting subcontract:

SUBCONTRACTORS' CERTIFICATION

_____certifies that:
(Subcontractor)

1. It tends to use the following listed construction trades in the work under the subcontract:

_____; and

2. Will comply with the Minority manpower ratio and specific affirmative action steps contained herein.

_____
(Signature of authorized representative of Subcontractor)

In order to ensure that the said subcontractors' certification becomes a part of all subcontracts under the prime contract, no subcontract shall be executed until an authorized representative of the Town has determined, in writing, that the said certification has been incorporated in such subcontract, regardless of tier. Any subcontract executed without such written approval shall be void.

XV. Materiality

The Requirements made of the bidder pursuant to these bid conditions are material, will govern the bidders performance on the project and will be made part of the bid.

MINIMUM MINORITY PERCENTAGES TO BE APPLIED TO STATE AND STATE ASSISTED CONTRACTS WITHIN THE COMMONWEALTH OF MASSACHUSETTS

The following percentages shall apply:

AREA	NOT LESS THAN
Boston:	
- Impact Area [Jamaica Plain (part), Mattapan, South Cove, Chinatown, Bay Village, Roxbury, Dorchester, and South End]	30%
- Other parts of Boston	10%
Cambridge	12%
New Bedford	18%
Springfield	10%
All other cities and towns	5%

END OF ATTACHMENT B

ATTACHMENT C – MONTHLY PRICE ADJUSTMENTS

DOCUMENT 00811
SPECIAL PROVISIONS
MONTHLY PRICE ADJUSTMENT FOR HOT MIX ASPHALT (HMA) MIXTURES
ENGLISH UNITS
Revised: 02/02/2009

This provision applies to all projects using greater than 100 tons of hot mix asphalt (HMA) mixtures containing liquid asphalt cement as stipulated in the Notice to Contractors section of the bid documents.

The Price Adjustment will be based on the variance in price for the liquid asphalt component only from the Base Price to the Period Price. It shall not include transportation or other charges. This Price Adjustment will occur on a monthly basis.

Base Price

The Base Price of liquid asphalt on a project as listed in the Notice to Contractors section of the bid documents is a fixed price determined at the time of bid by the Department by using the same method as for the determination of the Period Price detailed below.

Period Price

Please note that, starting December 15, 2008, two sets of period prices will be posted each month on the MassHighway website at http://www.mhd.state.ma.us/. They will be labeled “New Asphalt Period Price Method” and “Old Asphalt Period Price Method”.

New Asphalt Period Price Method

The “New Asphalt Period Price Method” is for contracts bid after December 15, 2008 and will show the Period Price of liquid asphalt for each monthly period as determined by MassHighway using the average selling price per standard ton of PG64-28 paving grade (primary binder classification) asphalt, FOB manufacturer's terminal, as listed under the "East Coast Market - New England, Boston, Massachusetts area" section of the Poten & Partners, Inc. "Asphalt Weekly Monitor". This average selling price is listed in the issue having a publication date of the second Friday of the month and will be posted as the Period Price for that month. MassHighway will post this Period Price on this website within two (2) business days following their receipt of the relevant issue of the "Asphalt Weekly Monitor". Poten and Partners has granted MassHighway the right to publish this specific asphalt price information sourced from the Asphalt Weekly Monitor.

Old Asphalt Period Price Method

The “Old Asphalt Period Price Method” Period Price will be for contracts bid on or before December 15, 2008 and will contain liquid asphalt prices as determined by the old or previous method. These prices will continue to be posted on MassHighway’s website until all contracts using the “Old Asphalt Period Price Method” Period Price have been closed.

New and Old Asphalt Period Price Methods

The paragraphs below apply to both the New and the Old Asphalt Period Price Methods.

The Contract Price of the hot mix asphalt mixture will be paid under the respective item in the Contract. The price adjustment, as herein provided, upwards or downwards, will be made after the work has been performed, using the monthly period price for the month during which the work was performed.

The Price Adjustment applies only to the actual virgin liquid asphalt content in the mixture placed on the job in accordance with the Standard Specifications for Highways and Bridges, Division III, Section M3.11.03.

The Price Adjustment will be a separate payment item. It will be determined by multiplying the number of tons of hot mix asphalt mixtures placed during each monthly period times the liquid asphalt content percentage times the variance in price between Base Price and Period Price of liquid asphalt.

This Price Adjustment will be paid only if the variance from the Base Price is 5% or more for a monthly period. The complete adjustment will be paid in all cases with no deduction of the 5% from either upward or downward adjustments.

No Price Adjustment will be allowed beyond the Completion Date of this Contract, unless there is a Department-approved extension of time.

******** END OF DOCUMENT ********

DOCUMENT 00812

SPECIAL PROVISIONS
MONTHLY PRICE ADJUSTMENT FOR DIESEL FUEL AND GASOLINE –
ENGLISH UNITS

Revised: 01/26/2009

This monthly fuel price adjustment is inserted in this contract because the national and worldwide energy situation has made the future cost of fuel unpredictable. This adjustment will provide for either additional compensation to the Contractor or repayment to the Commonwealth, depending on an increase or decrease in the average price of diesel fuel or gasoline.

This adjustment will be based on fuel usage factors for various items of work developed by the Highway Research Board in Circular 158, dated July 1974. These factors will be multiplied by the quantities of work done in each item during each monthly period and further multiplied by the variance in price from the Base Price to the Period Price.

The Base Price of Diesel Fuel and Gasoline will be the price as indicated in the Department's web site (www.mhd.state.ma.us) for the month in which the contract was bid, which includes State Tax.

The Period Price will be the average of prices charged to the State, including State Tax for the bulk purchases made during each month.

This adjustment will be effected only if the variance from the Base Price is 5% or more for a monthly period. The complete adjustment will be paid in all cases with no deduction of the 5% from either upward or downward adjustments.

No adjustment will be paid for work done beyond the extended completion date of any contract.

Any adjustment (increase or decrease) to estimated quantities made to each item at the time of final payment will have the fuel price adjustment figured at the average period price for the entire term of the project for the difference of quantity.

The fuel price adjustment will apply only to the following items of work at the fuel factors shown:

ITEMS COVERED	**FUEL FACTORS**	
	Diesel	**Gasoline**
Excavation: and Borrow Work: Items 120, 120.1, 121, 123, 124, 125, 127, 129.3, 140, 140.1, 141, 142, 143, 144., 150, 150.1, 151 and 151.1 (Both Factors used)	0.29 Gallons / CY.	0.15 Gallons / CY
Surfacing Work: All Items containing Hot Mix Asphalt	2.90 Gallons / Ton	Does Not Apply

******** END OF DOCUMENT ********

DOCUMENT 00814

SPECIAL PROVISIONS
PRICE ADJUSTMENT FOR PORTLAND CEMENT CONCRETE MIXES

January 12, 2009

This provision applies to all projects using greater than 100 Cubic Yards (76 Cubic Meters) of Portland cement concrete containing Portland cement as stipulated in the Notice to Contractors section of the Bid Documents. This Price Adjustment will occur on a monthly basis.

The Price Adjustment will be based on the variance in price for the Portland cement component only from the Base Price to the Period Price. It shall not include transportation or other charges.

The Base Price of Portland cement on a project is a fixed price determined at the time of bid by the Department by using the same method as for the determination of the Period Price (see below) and found in the Notice to Contractors.

The Period Price of Portland cement will be determined by using the latest published price, in dollars per ton (U.S.), for Portland cement (Type I) quoted for Boston, U.S.A. in the **Construction Economics** section of *ENR Engineering News-Record* magazine or at the ENR website http://www.enr.com under **Construction Economics**. The Period Price will be posted on the MassHighway website the Wednesday immediately following the publishing of the monthly price in ENR, which is normally the first week of the month.

The Contract Price of the Portland cement concrete mix will be paid under the respective item in the Contract. The price adjustment, as herein provided, upwards or downwards, will be made after the work has been performed, using the monthly period price for the month during which the work was performed.

The price adjustment applies only to the actual Portland cement content in the mix placed on the job in accordance with the Standard Specifications for Highways and Bridges, Division III, Section M4.02.01. No adjustments will be made for any cement replacement materials such as fly ash or ground granulated blast furnace slag.

The Price Adjustment will be a separate payment item. It will be determined by multiplying the number of cubic yards of Portland cement concrete placed during each monthly period times the Portland cement content percentage times the variance in price between the Base Price and Period Price of Portland cement.

This Price Adjustment will be paid only if the variance from the Base Price is 5% or more for a monthly period. The complete adjustment will be paid in all cases with no deduction of the 5% from either upward or downward adjustments.

No Price Adjustment will be allowed beyond the Completion Date of this Contract, unless there is a Department-approved extension of time.

****
*

END OF DOCUMENT

ATTACHMENT D - TOWN OF DEDHAM DESIGN & CONSTRUCTION STANDARDS

COMMONWEALTH OF MASSACHUSETTS

TOWN OF DEDHAM

DESIGN AND CONSTRUCTION STANDARDS 2011

DEPARTMENT OF PUBLIC WORKS AND ENGINEERING DEPARTMENT

TOWN OF DEDHAM

EXISTING DETAIL SURVEY STANDARDS

All surveys shall be performed in accordance with 250 CMR 6.00 and the appropriate corresponding section. The survey shall be tied to the State Plane Massachusetts Mainland Coordinate System, NAD 1983 horizontally and NAVD 1988 vertically.

Plans shall be prepared at a scale of 1”=20’ or some other scale approved by the Town. The final plan shall be submitted as a “hard copy” signed and stamped by a Registered Land Surveyor as well as an electronic file compatible with AutoCAD at a minimum release of R14. The CAD file shall be produced with Grid North coincident with the “Y” axis and no “hard rotation” of entities within the drawing. The base point of the drawing shall be (0,0,0). A view rotation for cosmetic appearances of the drawing is acceptable.

The following is a detailed list of all items to be field located and included on all final plan submittals:

BUILDINGS	**TRAVELED WAYS** **LOCATION, SIZE, SURFACE TYPE**
Building corners	Curbing
Decks/ porches	Driveways
House number	Edge of pavement
Top of foundation elevation	Foot/cart paths
Top of step elevation	Parking areas
	Pavement markings
	Sidewalks
	Signage
	Walkways

SEWER & DRAIN STRUCTURES	**UTILITIES** **WATER, GAS, ELECTRIC, TELEPHONE**
Manholes	Dig Safe markings
Catch basins	Fire alarm boxes
Rim elevations	Gates, Box valves, Box meters, hand holes, hydrants
Invert elevations	Light poles/ pole numbers
Pipe sizes	Overhead wire connections, guy wires
Flow direction	Record utility information
	Service connections
	Utility poles/ pole numbers

TOWN OF DEDHAM

EXISTING DETAIL SURVEY STANDARDS

VEGETATION/ NATURAL FEATURES	MISCELLANEOUS DETAIL
Boulders	Fencing/ type, height
Deciduous/ coniferous trees	Flagpoles
Tree sizes	Guardrails
Edge of woods	Hay bales/ silt fencing
Landscaping	Mailboxes
Ledge outcrops	Monitoring wells
Shrubs, hedges	North arrow
Water bodies	Private water wells
Wetland flags (where applicable)	Riprap slopes
	Railroad ties
	Retaining walls
	Swimming pools
	Test pits
	Yard lights

TOPOGRAPHY	PROPERTY/ RIGHT OF WAY LINES
Benchmarks (set as needed)	Abutter names/ deed references
Existing contours @ 1 foot intervals	Assessors parcel numbers
Spot elevations @ 50 foot intervals	Easements
Vertical & horizontal datum	Lot lines
	Public & private street names/ widths
	Recovered monumentation

TOWN OF DEDHAM
STANDARD DETAILS

Layer Name	***Layer Description***	***Color***	***Linetype***
Abut	Abutter Lines and Text	11	Continuous
Arrow	North Arrow	White	Continuous
Barscale	Bar Scale	White	Continuous
BD	Curves, Bearings and Distances	Red	Continuous
Control	Survey Control and Traverse Lines	White	Hidden
Control-GPS	GPS Survey Control	160	Continuous
Crowsft	Crows Feet on Property/ Lot Lines	White	Crowsft
ExBld	Existing Buildings + Text	11	Continuous
ExContours	Existing Contours - Intermediate	134	Dash4
ExConTxt	Existing Contours Text	252	Continuous
ExEase	Existing Easements	9	Easements
ExElec-rec	Existing Electric record location only	22	Hidden
ExEOW	Existing Edge of Water	12	Continuous
ExFlow	Existing Flow Lines, Ditches etc.	Red	Dash2
ExFnc	Existing Fences	240	Continuous
ExGas-rec	Existing Gas-record location only	40	Hidden
ExHicon	Existing Highlighted Contours (Index Contours)	252	Dash5
ExInv	Existing Invert Elevations	253	Continuous
ExLedge	Existing Ledge Outcrops	130	Continuous
ExPool	Existings Swimming Pools	11	Continuous
ExPrk	Existing Parking Spaces, Pavement Markings	96	Continuous

TOWN OF DEDHAM
STANDARD DETAILS

Layer Name	***Layer Description***	***Color***	***Linetype***
ExRtw	Existing Retaining Walls	241	Continuous
ExSD	Existing Sewer and Drain Lines	72	Continuous
ExSE	Existing Spot Elevations	110	Continuous
ExSW	Existing Stone Walls	241	Continuous
ExTel-rec	Existing Telephone record location only	62	Hidden
ExTree	Existing Trees, Shrubs and Tree Lines	96	Continuous
ExTrv	Existing Travelways	8	Continuous
ExTxt	Existing Text	253	Continuous
ExUtil	Existing Utilities	52	Continuous
ExWater-rec	Existing Water record location only	142	Hidden
ExWet	Existing Wetland Flag Locations & Nos.	Green	DashDot
Field	Field Survey Shots, Detail/topo	White	Continuous
Hatch	Miscellaneous Hatch Patterns	96	Continuous
Legend	Plan Legend	White	Continuous
Locus	Locus/Vacinity Map	White	Continuous
Lots	Proposed Lot Lines	10	Center2
Lottxt	Proposed Lot Line Labels - TEXT	Red	Continuous
Monuments	Boundary and Roadway Monuments	White	Continuous
NoTopo	Field Shots (not to be used for topography)	White	Continuous

TOWN OF DEDHAM
STANDARD DETAILS

Layer Name	***Layer Description***	***Color***	***Linetype***
P-All	PS, Dwg. info., WCR+Drive tables Street names, Curve tables	Magenta	Continuous
P-Basel	Proposed Baselines	Cyan	Continuous
P-Basel-t	Station Equations, Geometry	Cyan	Continuous
P-Cond	Conduit, Pull boxes	Cyan	Continuous
P-Crown	Crown Line (if different from baseline)	Red	Continuous
P-Curb	Curbs, Walks, W.C.Ramps, Back Sidewalk, Ret.Walls (0.45 PL)	Blue/Red	Continuous
P-Duct	Electrical Ducts (interconnect cable)	Cyan	Continuous
P-Ease	Temporary Construction Easements	Red	Continuous
PL	Property Lines	Green	Continuous
P-Notes	General Notes	Cyan	Continuous
PntDESC	Point Node - DESCRIPTIONS	22	Continuous
PntELEV	Point Node - ELEVATIONS	Magenta	Continuous
PntNO	Point Node - NUMBERS	White	Continuous
P-Paint	Pavement Markings	Red	Continuous
P-Paint-t	Pavement Marking Text	Cyan/Red	Continuous
P-ROW	Right of Way w/Layout Reference, Row of Way Text	Blue	Continuous
P-Sign	Signs, Mast Arms, Span Wire, Text	Cyan/Red	Continuous
P-Signal	Traffic Signals, Traffic Signal Text	Cyan/Red	Continuous
P-Slope	Top or Bottom of Slope	Magenta	Hidden2

TOWN OF DEDHAM
STANDARD DETAILS

Layer Name	***Layer Description***	***Color***	***Linetype***
P-Ties	Curb Tie Lines, Survey Ties	Cyan/White	Continuous
P-Tree	Trees, Grass, Shrub	Magenta	Continuous
ROW	Right of Way Lines	Yellow	Phantom2
ROWTXT	Right of Way TEXT	White	Continuous
SAVE	Save Layer for Property Calcs, etc. (FROZEN)	8	Continuous
Stakeout	Stakeout Information, Calcs. + Points	White	Continuous
Testpits	Testpits	Magenta	Continuous
Tmesh	Tin Lines	Magenta	Continuous
VP	ViewPorts (Paper Space)	White	Continuous
Wetbuff	Wetland Buffer Zones	14	Dash6
Wetlands	Wetland Border Lines	12	DashDot

TEMPORARY TRAFFIC CONTROL NOTES

GENERAL

1. ALL TEMPORARY TRAFFIC CONTROL MEASURES SHALL CONFORM TO PART VI OF THE MANUAL ON UNIFORM TRAFFIC CONTROL DEVICES (M.U.T.C.D.) 2009 EDITION, SUPPLEMENTALS THERETO, THE STANDARD SPECIFICATIONS, AND THE FOLLOWING NOTES.

2. LANE RESTRICTIONS MAY NOT REMAIN OVERNIGHT OR DURING NON–WORKING HOURS. AFTER EACH WORKING DAY, TRAFFIC CONTROL DEVICES THAT ARE NOT REQUIRED SHALL BE MOVED OFF THE ROADWAY OR FULL DEPTH CONSTRUCTION AREA AND PLACED SO AS NOT TO IMPEDE PEDESTRIAN AREAS, ABUTTER ACCESS OR CAUSE CONFUSION TO MOTORISTS. IN CERTAIN CIRCUMSTANCES, AND ONLY WITH THE APPROVAL OF THE TOWN AND THE ENGINEER, CAN LANE RESTRICTIONS REMAIN OVERNIGHT.

3. CONTRACTOR SHALL PROVIDE A SAFE TEMPORARY PEDESTRIAN ACCESS WHERE EXISTING SIDEWALKS OR OTHER PEDESTRIAN AREAS ARE AFFECTED BY CONSTRUCTION WORK. CONTRACTOR SHALL MAINTAIN ABUTTER ACCESS AT ALL TIMES EXCEPT FOR SHORT PERIODS APPROVED BY THE ENGINEER.

4. CONTRACTOR SHALL PLACE ALL CONSTRUCTION SIGNING, TRAFFIC CONTROL DEVICES AND TEMPORARY PAVEMENT MARKING FOR EACH PHASE PRIOR TO COMMENCEMENT OF CONSTRUCTION.

5. ONE (1) THRU TRAVEL LANE HAVING A MINIMUM WIDTH OF 11'–0" SHALL BE PROVIDED FOR BOTH DIRECTIONS (LANE TO BE SHARED AND DIRECTION OF TRAVEL TO ALTERNATE IN SOME SITUATIONS UNDER POLICE OFFICER CONTROL) DURING ALL PHASES OF CONSTRUCTION AS SHOWN ON THE TEMPORARY TRAFFIC CONTROL PLANS, UNLESS OTHERWISE DIRECTED BY THE ENGINEER.

6. IN THE INTEREST OF PUBLIC SAFETY AND CONVENIENCE, THE TOWN MAY, WHEN WORK INFRINGES UPON THE TRAVELED WAY, RESTRICT THE CONTRACTOR'S WORKING HOURS.

ROADS & SIDEWALKS

DESCRIPTION	DETAIL NUMBER
ROADWAY & PAVEMENT	
TYPICAL ROADWAY SECTION	RS.01
TYPICAL RESIDENTIAL STREET ROADWAY SECTION (NEW SUBDIVISION)	RS.02
ROAD WIDENING & OVERLAY (LESS THAN 6' WIDE)	RS.03
ROAD WIDENING & OVERLAY (6' WIDE OR GREATER)	RS.04
PAVEMENT TRANSITION	RS.05
DRIVEWAYS	
FULL DEPTH DRIVEWAY APRON (NO SIDEWALK)	RS.06
TYPICAL CURB CUT PLAN– RESIDENTIAL DRIVEWAYS / NO SIDEWALKS	RS.07
TYPICAL CURB CUT PLAN–COMMERCIAL DRIVEWAYS	RS.08
FULL DEPTH DRIVEWAY APRON SECTION	RS.09
SIDEWALKS	
HMA SIDEWALK THROUGH DRIVEWAY	RS.10
CEMENT CONCRETE SIDEWALK THROUGH DRIVEWAY	RS.11
PRECAST CONCRETE CURB & SIDEWALK	RS.12
CAST IN PLACE CONCRETE CURB & SIDEWALK	RS.13
ASPHALT OR CEMENT CONCRETE SIDEWALK	RS.14
SIDEWALK WITH GRASS STRIP	RS.15
WHEELCHAIR RAMPS	
CONCRETE WHEELCHAIR RAMPS	RS.16
DETECTABLE WARNING PANELS	RS.17
CURB TRANSITION LENGTHS FOR WHEELCHAIR RAMP	RS.18

DEDHAM DPW
DESIGN & CONSTRUCTION STANDARDS

DETAIL INDEX
MISCELLANEOUS

SCALE:	DATE OF ISSUE:
NTS	FEBRUARY 2011
REVISED:	
DETAIL NUMBER: RS–INDEX.01	

ROADS & SIDEWALKS

DESCRIPTION	DETAIL NUMBER
CURBING	
VERTICAL GRANITE CURBING–TYPE VB	RS.19
SLOPED GRANITE EDGING	RS.20
GRANITE CURB TO SLOPED EDGING TRANSITION	RS.21
HOT MIX ASPHALT–TYPE "A"	RS.22
HOT MIX ASPHALT–TYPE 3	RS.23
ISLANDS	
TRAFFIC ISLAND (VERTICAL CURBING)	RS.24
TRAFFIC ISLAND (SLOPED EDGING)	RS.25
RAISED PLANTING ISLAND DETAIL	RS.26
ISLAND REMOVAL	RS.27
STEEL BEAM HIGHWAY GUARD (TYPE SS)	
VERTICAL GRANITE CURB OR ASPHALT CURB	RS.28
HOT MIX ASPHALT BERM–TYPE "A"	RS.29
SLOPED GRANITE EDGING	RS.30
RIP–RAP SLOPE	RS.31
SCORED CONCRETE PAVEMENT	RS.32

DEDHAM DPW
DESIGN & CONSTRUCTION STANDARDS

DETAIL INDEX
MISCELLANEOUS

SCALE:	DATE OF ISSUE:
NTS	FEBRUARY 2011
REVISED:	
DETAIL NUMBER: RS–INDEX.02	

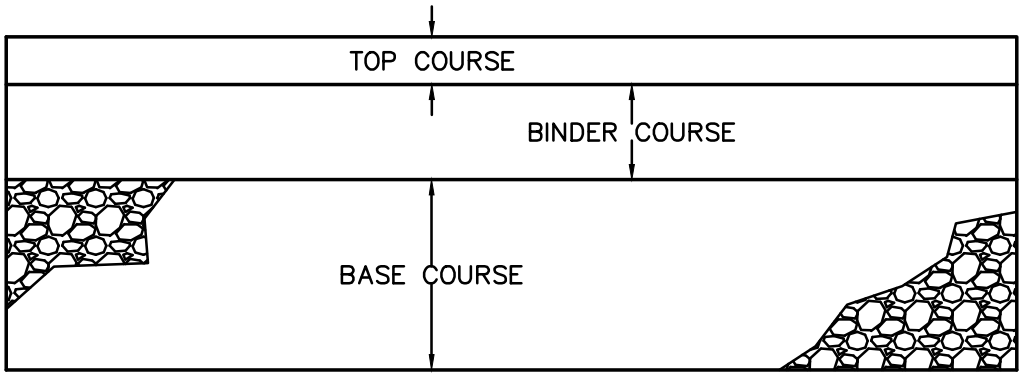

HOT MIX ASPHALT PAVEMENT CONSTRUCTION			
	ARTERIAL	COLLECTOR	LOCAL
TOP COURSE THICKNESS (IN):	2	2	1–1/2
BINDER COURSE THICKNESS (IN):	3	3	2
BASE COURSE THICKNESS (IN):	12	12	12

NOTES:

1) HOT MIX ASPHALT SHALL CONFORM TO SECTION 460 OF THE MASS DOT STANDARD SPECIFICATIONS.

2) BASE COURSE MATERIAL SHALL BE GRAVEL BORROW M1.03.0 TYPE "B" FOR NEW ROADWAY CONSTRUCTION AND SHALL BE EITHER GRAVEL BORROW M1.03.0 TYPE "B" OR RECLAIMED PAVEMENT BORROW M1.09.0.

3) A TACK COAT CONSISTING OF ASPHALT EMULSION TYPE "RS–1" SHALL BE APPLIED OVER THE BINDER COURSE AT UNIFORM RATE OF 0.05 GALLONS PER SQUARE YARD IMMEDIATELY PRIOR TO INSTALLATION OF THE TOP COURSE.

4) RECLAMATION DEPTH SHALL BE A MINIMUM OF 12 INCHES. IF BOTTOM OF RECLAMATION IS ABOVE REQUIRED SUBGRADE, THE RECLAIMED MATERIAL SHALL BE REMOVED, THE EXISTING SUBGRADE SHALL BE EXCAVATED TO THE REQUIRED SUBGRADE ELEVATION AND RECLAIMED MATERIAL SHALL THEN BE PLACED TO THE REQUIRED GRADES. EXISTING SUBGRADE MAY REMAIN IN PLACE IF IT MEETS THE SPECIFICATION FOR GRAVEL BORROW M1.03.0 TYPE "B".

5) THE DIRECTOR OF ENGINEERING AND/OR THE DIRECTOR OF PUBLIC WORKS HAVE THE RIGHT TO REQUEST THAT A ROADWAY BE DESIGNED PER THE LATEST EDITION OF THE MASS DOT HIGHWAY DESIGN MANUAL

UNLESS OTHERWISE NOTED, CONSTRUCTION METHODS, MATERIAL REQUIREMENTS AND METHOD OF MEASUREMENT SHALL BE IN ACCORDANCE WITH THE LATEST EDITION OF THE MASSACHUSETTS DEPARTMENT OF TRANSPORTATION (MASS DOT) STANDARD SPECIFICATIONS.

ALSO REFERENCE CURRENT MASS DOT CONSTRUCTION AND TRAFFIC STANDARD DETAILS.

DEDHAM DPW
DESIGN & CONSTRUCTION STANDARDS

TYPICAL ROADWAY SECTION FOR VARIOUS ROAD CLASSIFICATIONS

SCALE:	DATE OF ISSUE:
NTS	FEBRUARY 2011
REVISED:	
DETAIL NUMBER: RS.01	

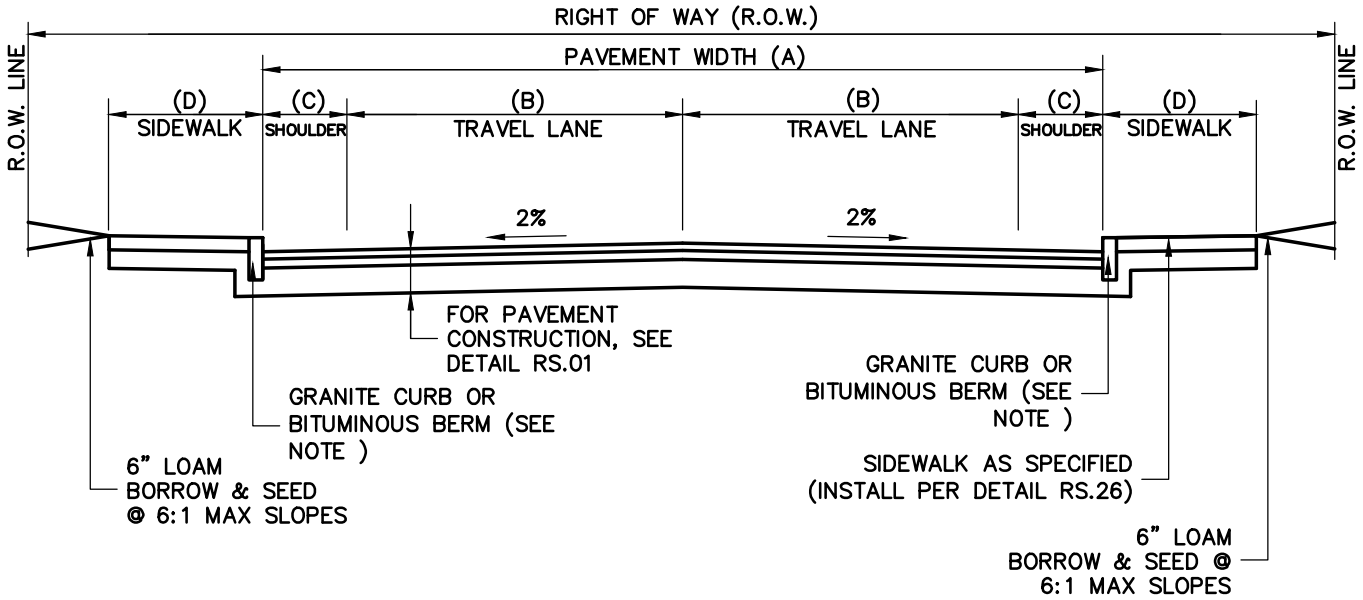

CLASSIFICATION	NO. OF LOTS SERVED	MINIMUM ROADWAY SECTION WIDTHS (FT)				
		R.O.W.	(A)	(B)	(C)	(D)
LOCAL	1–4	40	18	8	1	5
LOCAL	5–49	50	28	12	2	6
COLLECTOR	50+	60	32	12	4	6

NOTES:

1) CURB TYPE SHALL BE DETERMINED BY LOCATION IN TOWN AND CURRENT B.O.S. POLICIES.

2) SIDEWALKS SHALL INCORPORATE GRASS STRIPS WHERE FEASIBLE. MINIMUM GRASS STRIP WIDTHS SHALL BE 2 FEET. (SEE DETAIL RS.24)

DEDHAM DPW
DESIGN & CONSTRUCTION STANDARDS

TYPICAL RESIDENTIAL STREET ROADWAY SECTION
NEW SUBDIVISION

SCALE:	DATE OF ISSUE:
NTS	FEBRUARY 2011
REVISED:	
DETAIL NUMBER: RS.02	

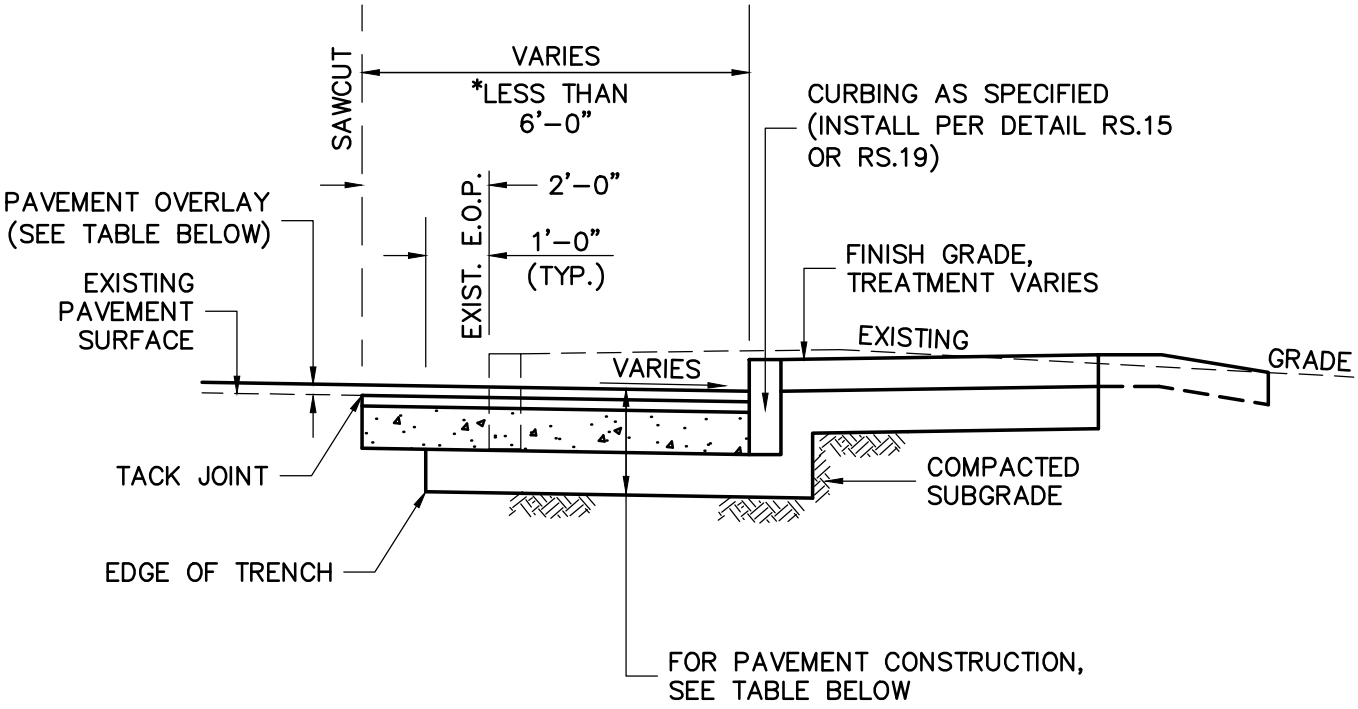

*NOTE: FOR PROPOSED WIDENING OF 6 FEET OR GREATER IN WIDTH, SEE DRAWING RS.04

	PAVEMENT CONSTRUCTION	
	FULL DEPTH CONSTRUCTION	PAVEMENT OVERLAY CONSTRUCTION
SURFACE:	4" HOT MIX ASPHALT (2" TOP COURSE MATETRIAL OVER 2" BINDER COURSE MATERIAL)	2" HOT MIX ASPHALT (TOP COURSE MATERIAL)
BASE:	8" HIGH–EARLY–STRENGTH CEMENT CONCRETE BASE COURSE	
BASECOURSE:	8" GRAVEL BORROW (TYPE "B")	

DEDHAM DPW
DESIGN & CONSTRUCTION STANDARDS

ROAD WIDENING AND OVERLAY
LESS THAN 6' WIDE

SCALE:	DATE OF ISSUE:
NTS	FEBRUARY 2011
REVISED:	
DETAIL NUMBER: RS.03	

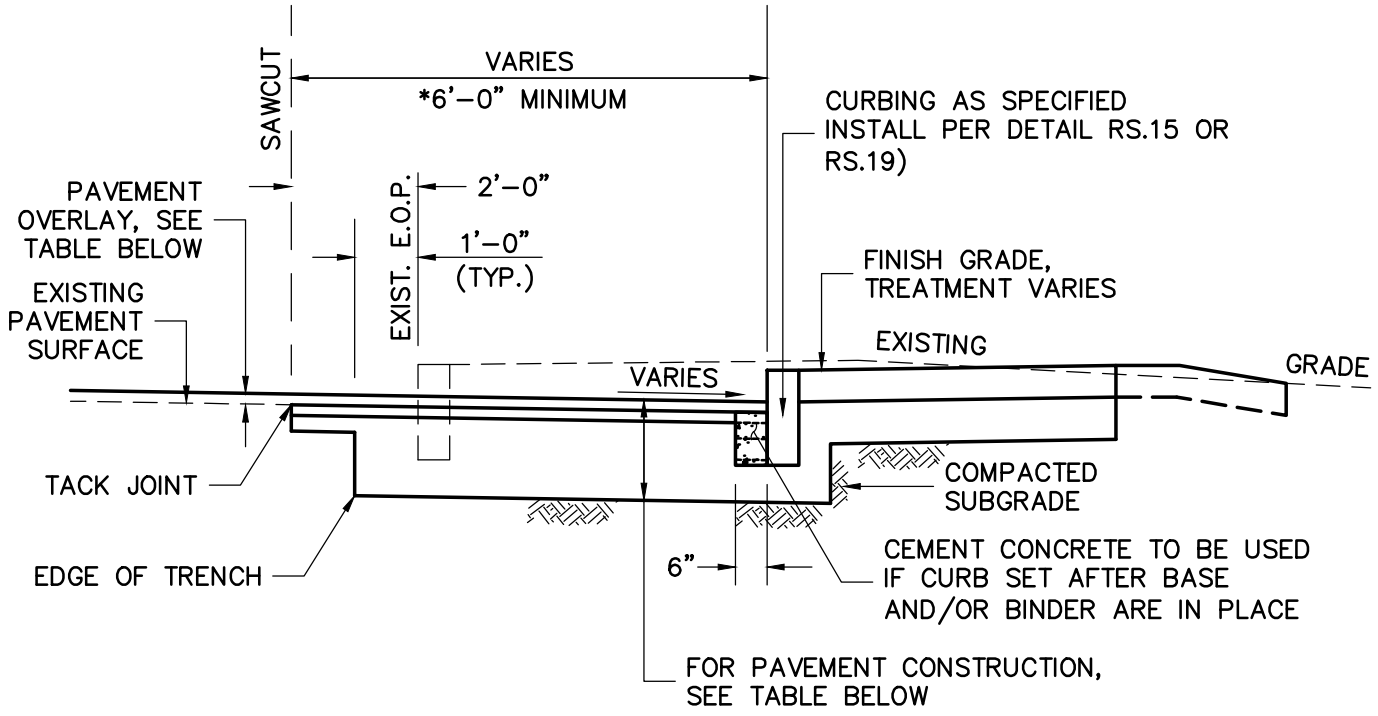

*NOTE: FOR PROPOSED WIDENING LESS THAN 6 FEET IN WIDTH, SEE DRAWING RS.03

	PAVEMENT CONSTRUCTION	
	FULL DEPTH CONSTRUCTION	PAVEMENT OVERLAY CONSTRUCTION
SURFACE:	5" HOT MIX ASPHALT (2" TOP COURSE MATERIAL OVER 3" BINDER COURSE MATERIAL)	2" HOT MIX ASPHALT (TOP COURSE MATERIAL)
BASECOURSE:	12" GRAVEL BORROW (TYPE "B")	

DEDHAM DPW
DESIGN & CONSTRUCTION STANDARDS

ROAD WIDENING AND OVERLAY
6' WIDE OR GREATER

SCALE:	DATE OF ISSUE:
NTS	FEBRUARY 2011
REVISED:	
DETAIL NUMBER: RS.04	

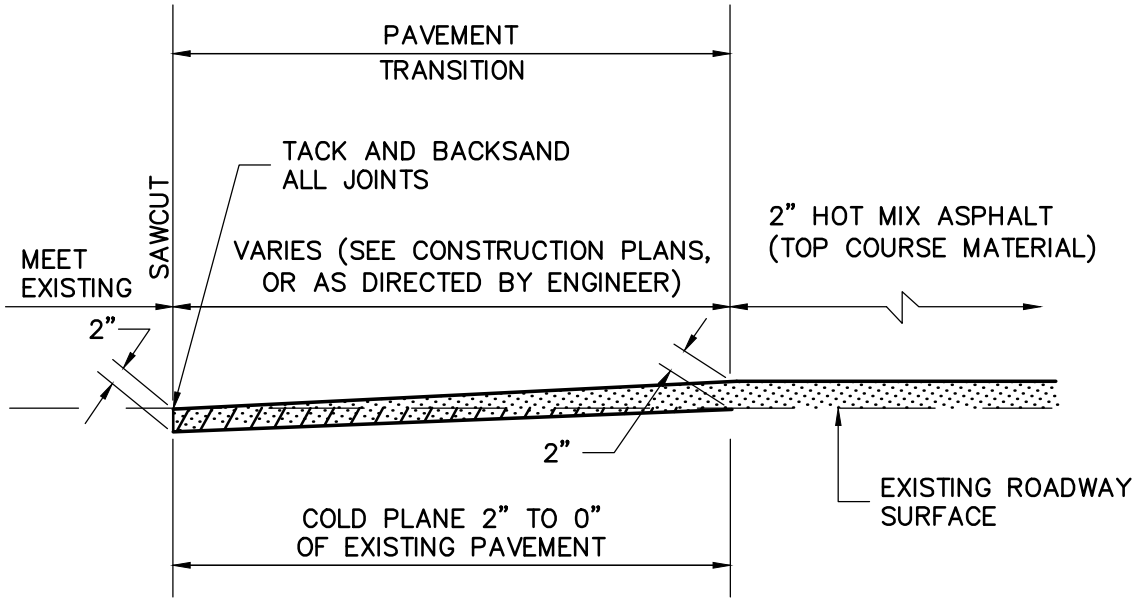

	DEDHAM DPW **DESIGN & CONSTRUCTION STANDARDS** PAVEMENT TRANSITION	SCALE: NTS	DATE OF ISSUE: FEBRUARY 2011
		REVISED:	
		DETAIL NUMBER: RS.05	

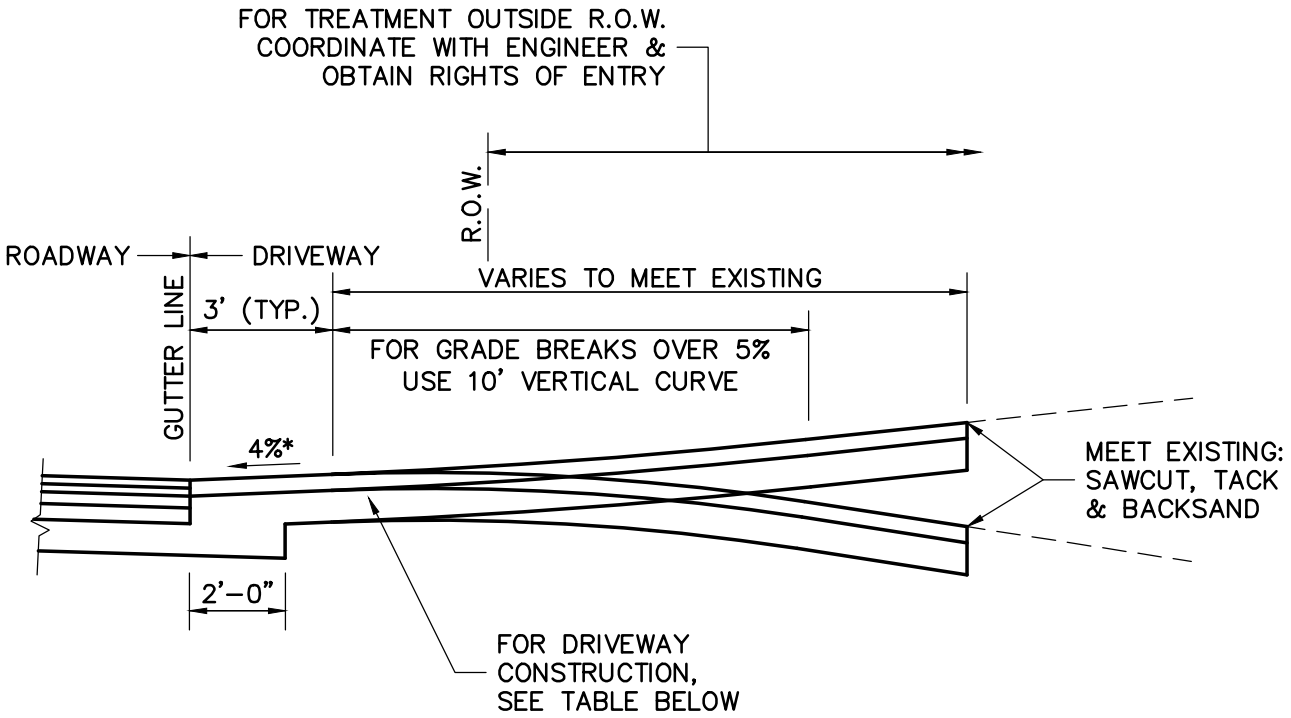

NOTE: FOR PLAN, SEE DRAWING RS.07

	DRIVEWAY CONSTRUCTION	
	CEMENT CONCRETE CONSTRUCTION	HOT MIX ASPHALT
SURFACE:	6" CEMENT CONCRETE (4000 PSI, 3/4", 610 WITH 6" x 6" x #10 WIRE MESH)	3-1/2" HOT MIX ASPHALT (1-1/2" TOP COURSE MATERIAL OVER 2" BINDER COURSE MATERIAL)
BASECOURSE:	8" GRAVEL BORROW (TYPE "B")	8" GRAVEL BORROW (TYPE "B")

R.O.W. = RIGHT OF WAY

* – MAY VARY TO MEET FIELD CONDITIONS; 1" LIP FOR CEMENT CONCRETE DRIVEWAYS

DEDHAM DPW
DESIGN & CONSTRUCTION STANDARDS

FULL DEPTH DRIVEWAY APRON – SECTION
NO SIDEWALK

SCALE:	DATE OF ISSUE:
NTS	FEBRUARY 2011
REVISED:	
DETAIL NUMBER: RS.06	

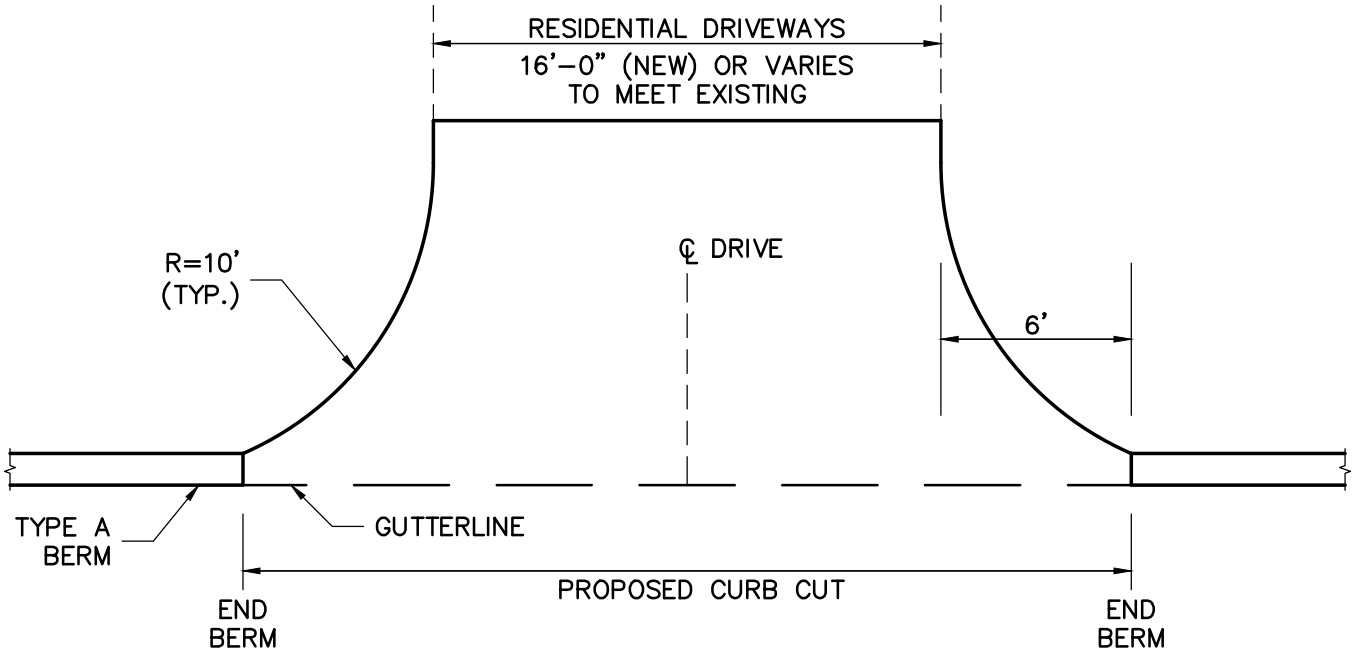

TYPE A BERM

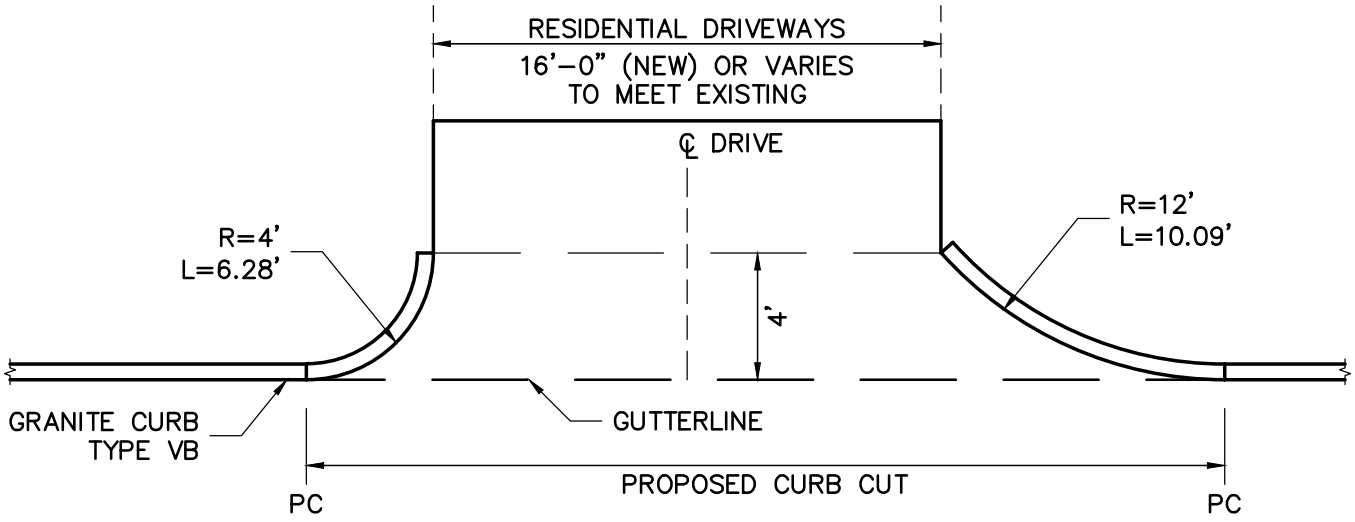

GRANITE CURB OR TYPE 3 HMA CURB

	DEDHAM DPW **DESIGN & CONSTRUCTION STANDARDS** TYPICAL CURB CUT PLAN – RESIDENTAIL DRIVEWAYS NO SIDEWALK	SCALE: NTS	DATE OF ISSUE: FEBRUARY 2011
		REVISED:	
		DETAIL NUMBER: RS.07	

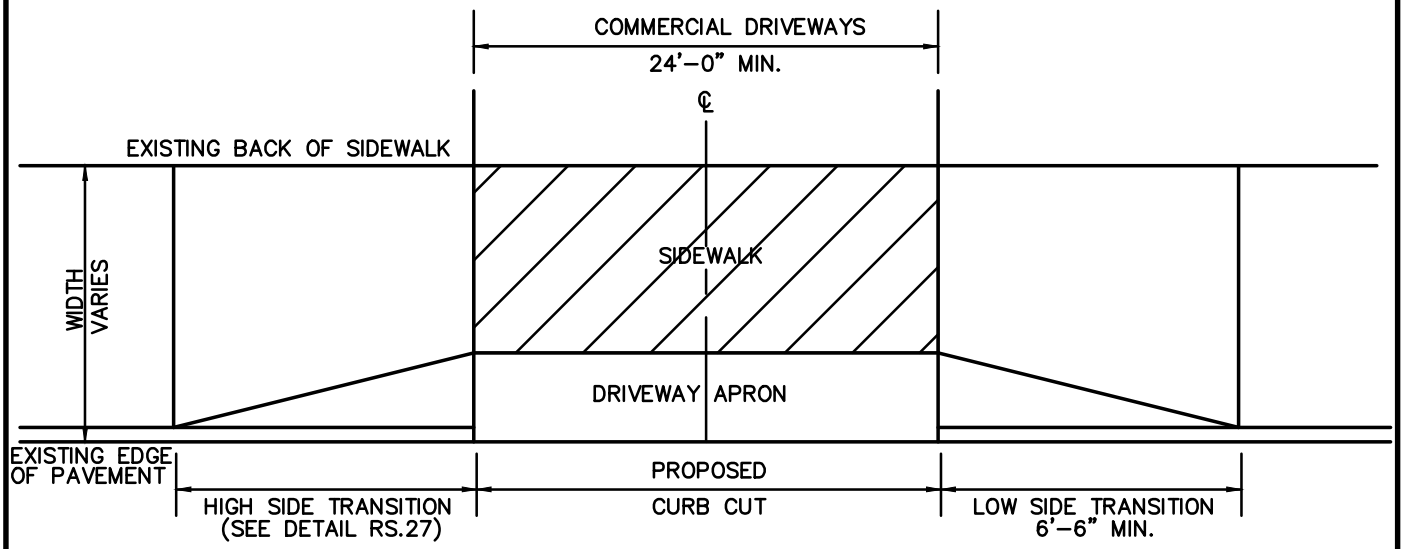

CURB CUT WITH SIDEWALK

MUST MAINTAIN A 3'–3" LEVEL PATH OF TRAVEL AT 1.5% CROSS SLOPE

	DEDHAM DPW **DESIGN & CONSTRUCTION STANDARDS** TYPICAL CURB CUT PLAN – COMMERCIAL DRIVEWAYS WITH SIDEWALK	SCALE: NTS	DATE OF ISSUE: FEBRUARY 2011
		REVISED:	
		DETAIL NUMBER: RS.08	

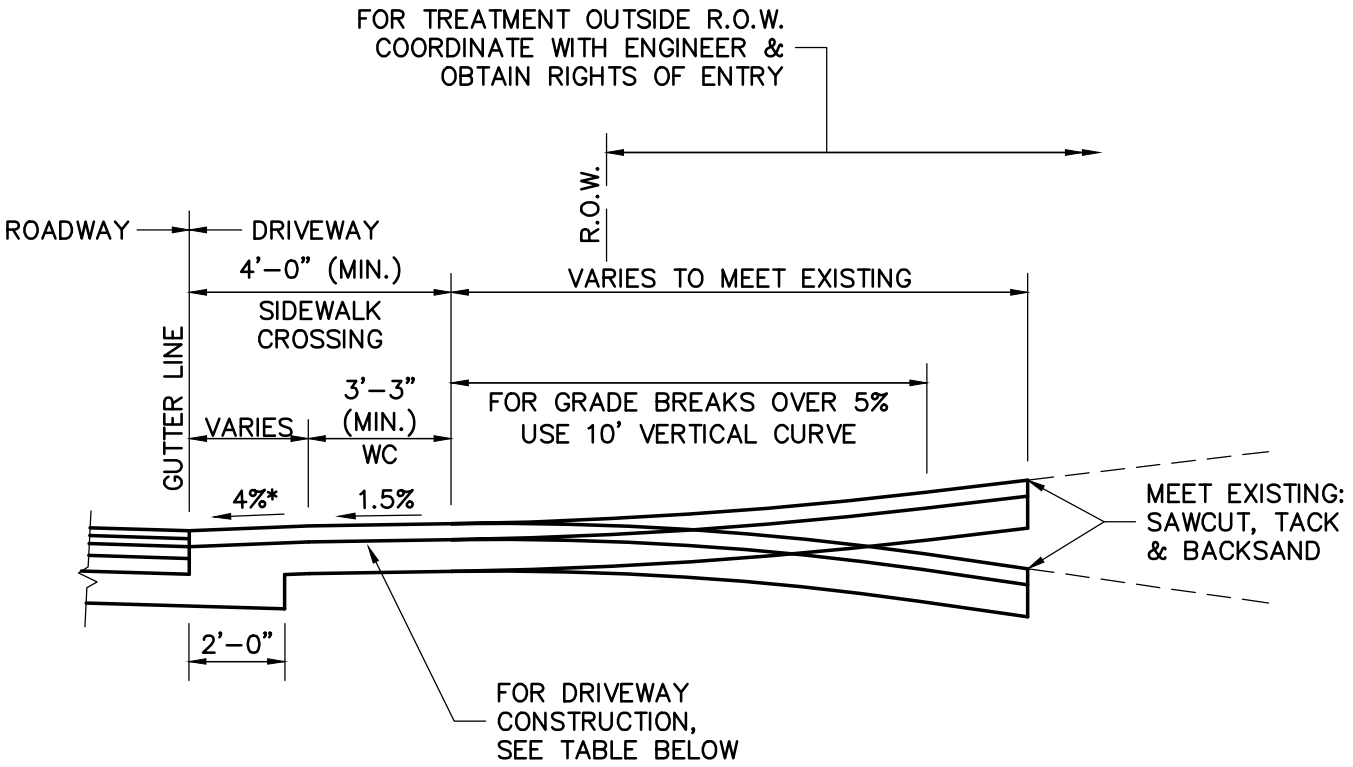

NOTES:

1. FOR PLAN, SEE DRAWING RS.09.
2. FOR CEMENT CONCRETE SIDEWALK SEE DRAWING RS.10.

	DRIVEWAY APRON CONSTRUCTION
SURFACE:	3–1/2" HOT MIX ASPHALT (1–1/2" TOP COURSE MATERIAL OVER 2" BINDER COURSE MATERIAL)
SUBBASE:	8" GRAVEL BORROW (TYPE "B")

WC = WHEELCHAIR (PATHWAY)
R.O.W. = RIGHT OF WAY

* – MAY VARY TO MEET FIELD CONDITIONS

DEDHAM DPW
DESIGN & CONSTRUCTION STANDARDS

FULL DEPTH DRIVEWAY APRON – SECTION
HOT MIX ASPHALT SIDEWALK CROSSING

SCALE:	DATE OF ISSUE:
NTS	FEBRUARY 2011
REVISED:	
DETAIL NUMBER:	RS.09

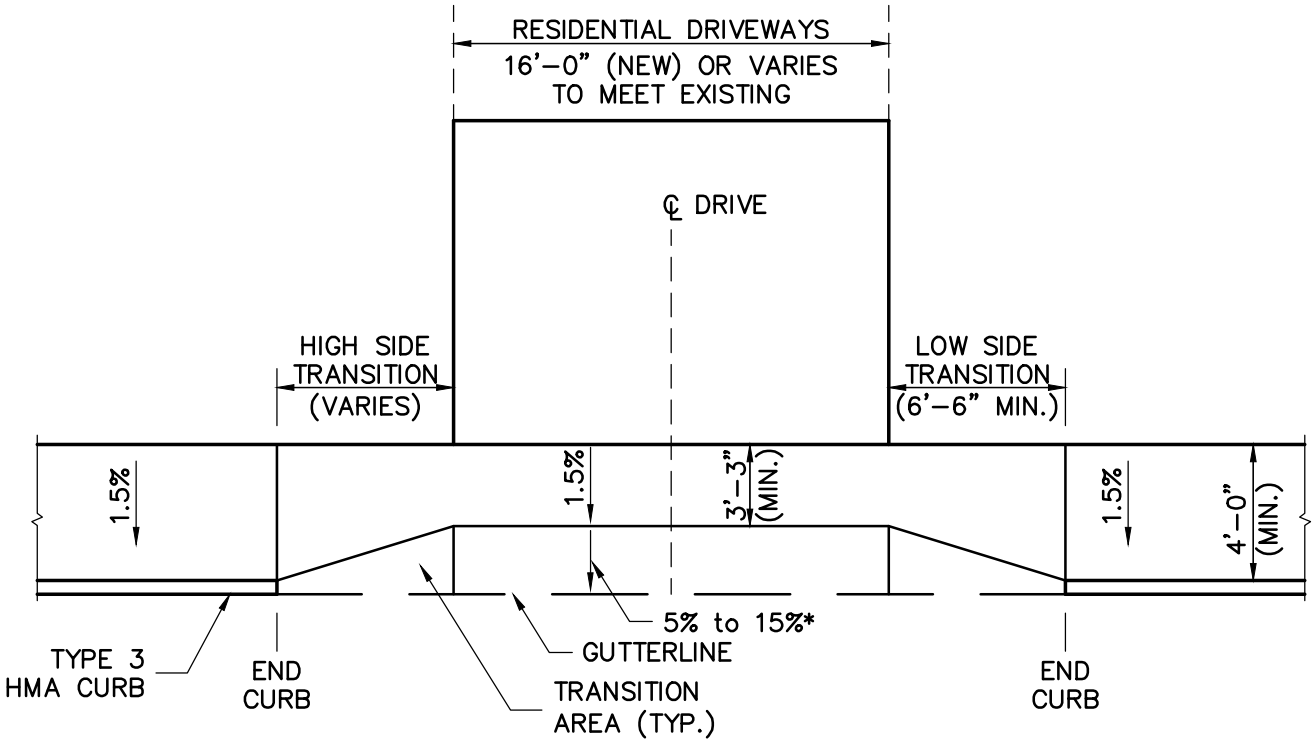

NOTES:

1. FOR SECTION, SEE DRAWING RS.09
2. TRANSITION AREA TO BE HAND PLACED HMA, GRADED TO TRANSITION FROM CURB SECTION TO DRIVEWAY SECTION. SLOPE OF TRANSITION AREA PARALLEL TO GUTTERLINE IS NOT TO EXCEED 7.5%.

	DRIVEWAY APRON CONSTRUCTION
SURFACE:	3–1/2" HOT MIX ASPHALT (1–1/2" TOP COURSE MATERIAL OVER 2" BINDER COURSE MATERIAL)
SUBBASE:	8" GRAVEL BORROW (TYPE "B")

* – MAY VARY TO MEET FIELD CONDITIONS

DEDHAM DPW
DESIGN & CONSTRUCTION STANDARDS

HOT MIX ASPHALT SIDEWALK THROUGH DRIVEWAY
HOT MIX ASPHALT CURB – TYPE 3

SCALE:	DATE OF ISSUE:
NTS	FEBRUARY 2011
REVISED:	
DETAIL NUMBER:	RS.10

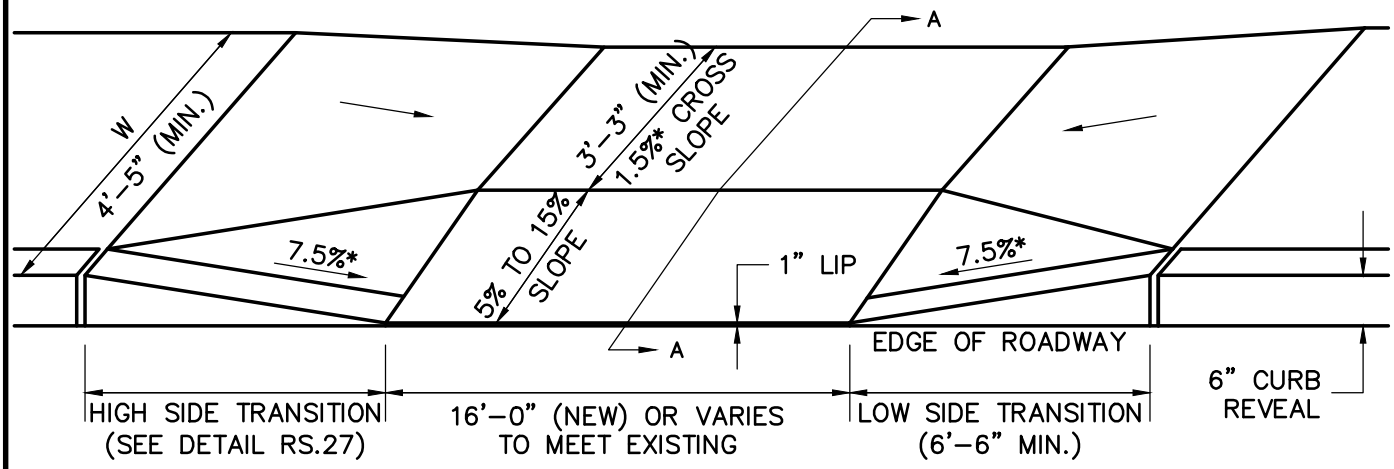

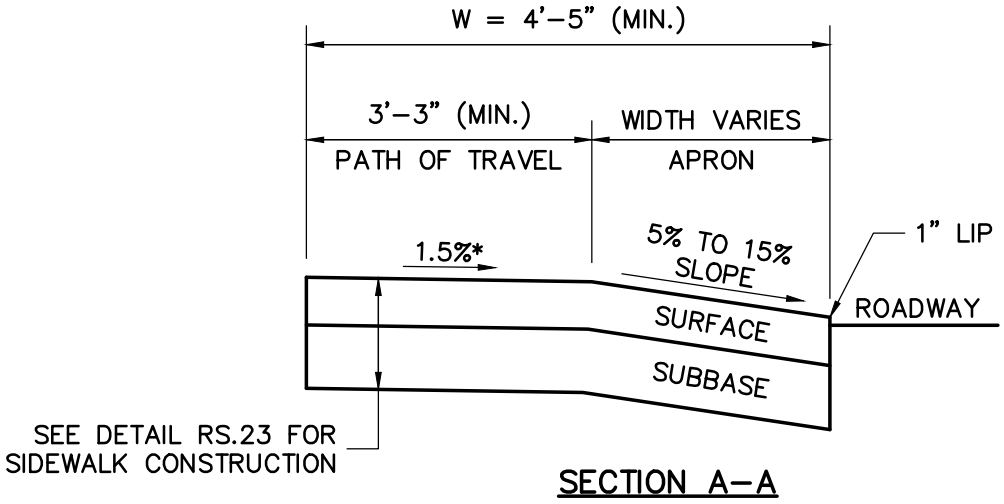

SECTION A–A

W = SIDEWALK WIDTH

* = TOLERANCE FOR CONSTRUCTION ±0.5%

DRIVEWAYS SHALL BE CONSTRUCTED IN CONFORMANCE WITH THE CURRENT REGULATIONS OF THE ARCHITECTURAL ACCESS BOARD, THE AMERICANS WITH DISABILITIES ACT AND THE CURRENT MASSHIGHWAY CONSTRUCTION STANDARDS.

	DEDHAM DPW **DESIGN & CONSTRUCTION STANDARDS** CEMENT CONCRETE SIDEWALK THROUGH DRIVEWAYS NO CURB RETURNS	SCALE: NTS	DATE OF ISSUE: FEBRUARY 2011
		REVISED:	
		DETAIL NUMBER: RS.11	

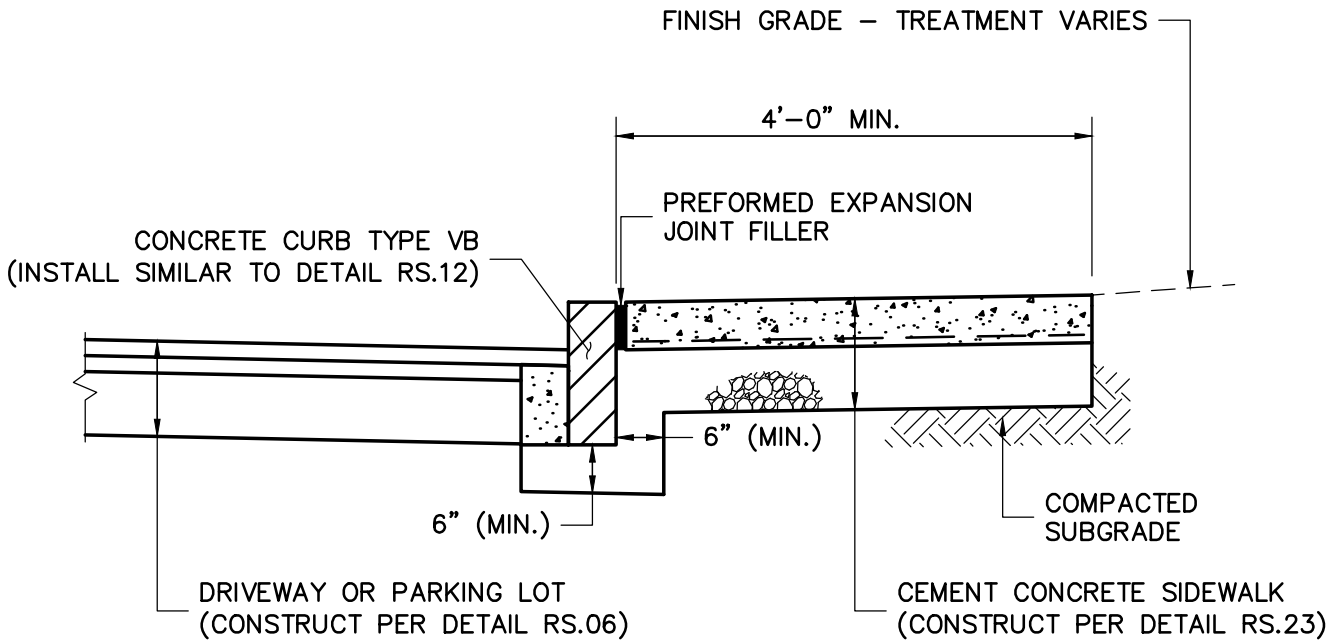

NOTE: PRECAST CONCRETE CURB SHALL NOT BE USED ON ANY PUBLIC STREET OR WAY. PRECAST CONCRETE CURB MAY BE USED ON PRIVATE WAYS, DRIVEWAYS AND IN PARKING LOTS.

	DEDHAM DPW **DESIGN & CONSTRUCTION STANDARDS** PRECAST CONCRETE CURB & SIDEWALK	SCALE: NTS	DATE OF ISSUE: FEBRUARY 2011
		REVISED:	
		DETAIL NUMBER: RS.12	

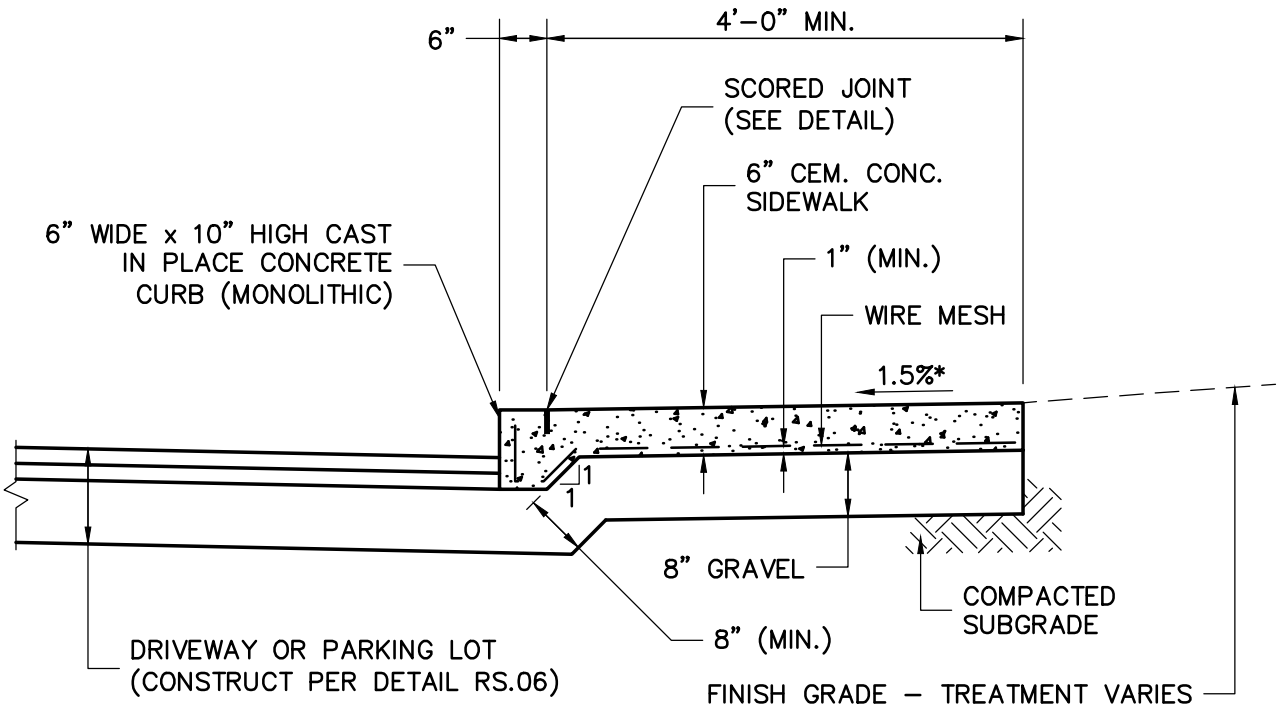

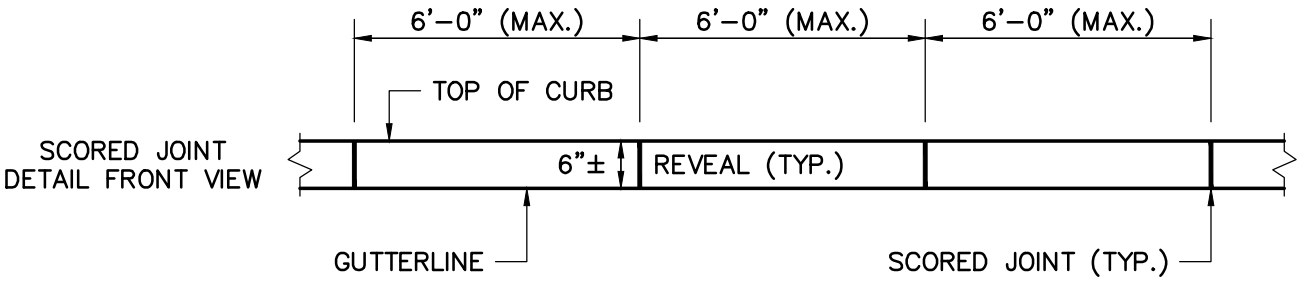

NOTE: MONOLITHIC CONCRETE CURB SHALL NOT BE USED ON ANY PUBLIC STREET OR WAY. MONOLITHIC CONCRETE CURB MAY BE USED ON PRIVATE WAYS, DRIVEWAYS AND IN PARKING LOTS.

* – TOLERANCE FOR CONSTRUCTION ±0.5%

	DEDHAM DPW **DESIGN & CONSTRUCTION STANDARDS** CAST IN PLACE CONCRETE CURB & SIDEWALK	SCALE: NTS	DATE OF ISSUE: FEBRUARY 2011
		REVISED:	
		DETAIL NUMBER: RS.13	

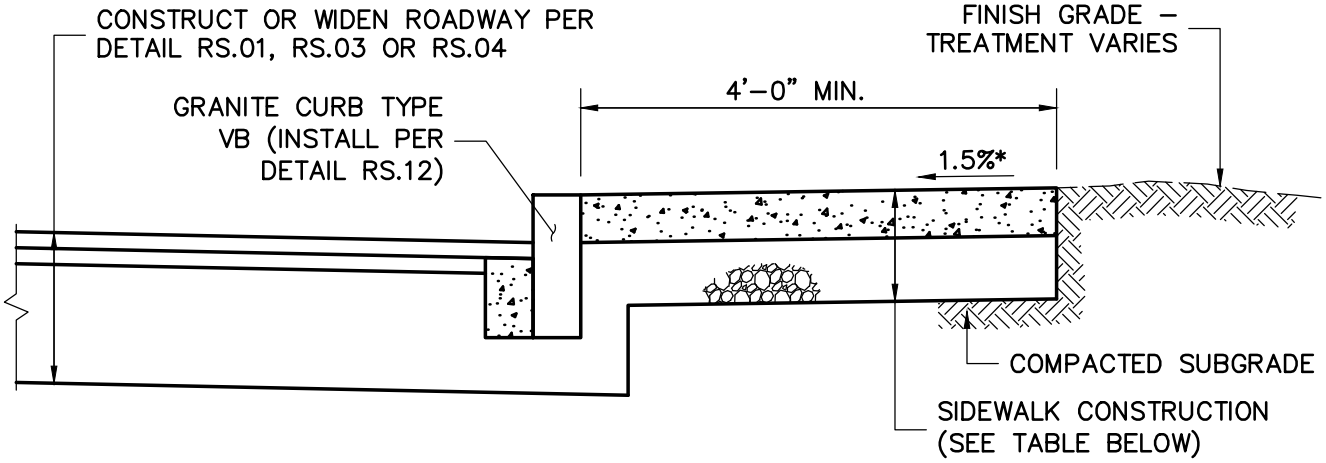

CEMENT CONCRETE SIDEWALK

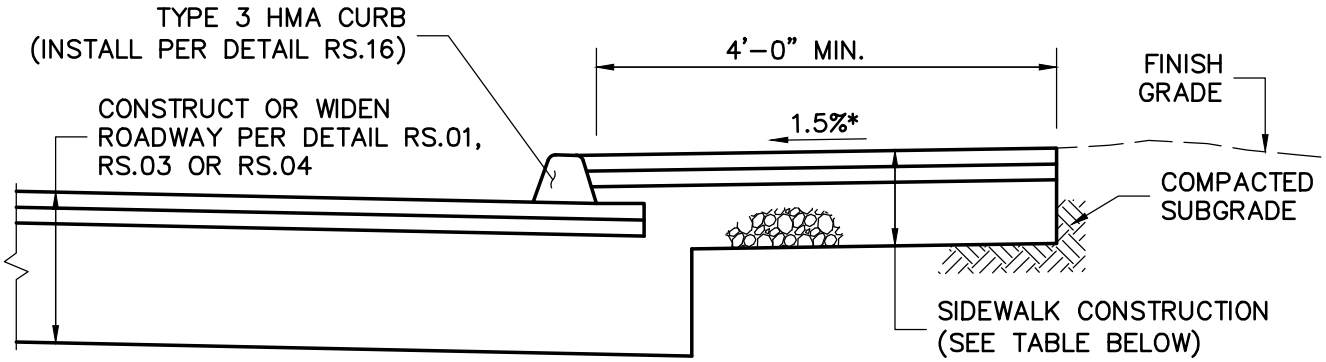

NOTE: GRANITE CURB MAY BE USED WITH HMA SIDEWALK

HOT MIX ASPHALT SIDEWALK

	SIDEWALK CONSTRUCTION	
	CEMENT CONCRETE CONSTRUCTION	HOT MIX ASPHALT CONSTRUCTION
SURFACE:	4" CEMENT CONCRETE (6" AT DRIVEWAYS) (4000 PSI, 3/4", 610)	2.5" HOT MIX ASPHALT (1.25" TOP COURSE MATERIAL OVER 1.25" BINDER COURSE MATERIAL)
SUBBASE:	8" GRAVEL BORROW (TYPE "B")	8" GRAVEL BORROW (TYPE "B")

* – TOLERANCE FOR CONSTRUCTION ±0.5%

	DEDHAM DPW **DESIGN & CONSTRUCTION STANDARDS** HOT MIX ASPHALT OR CEMENT CONCRETE SIDEWALK	SCALE: NTS	DATE OF ISSUE: FEBRUARY 2011
		REVISED:	
		DETAIL NUMBER: RS.14	

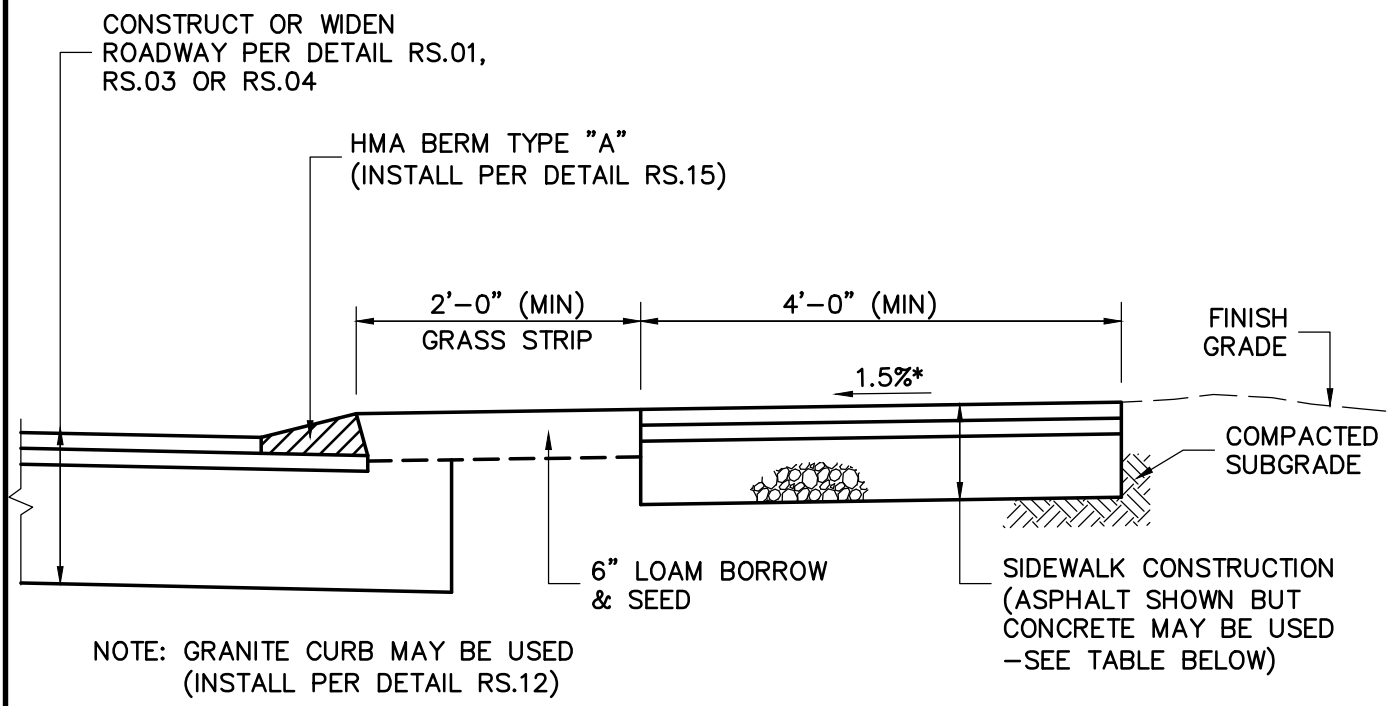

	CEMENT CONCRETE CONSTRUCTION	HOT MIX ASPHALT CONSTRUCTION
SURFACE:	4" CEMENT CONCRETE (4000 PSI, 3/4", 610)	2.5" HOT MIX ASPHALT (1.25" TOP COURSE MATERIAL OVER 1.25" BINDER COURSE MATERIAL)
BASECOURSE:	8" GRAVEL BORROW (TYPE "B")	8" GRAVEL BORROW (TYPE "B")

* – TOLERANCE FOR CONSTRUCTION ±0.5%

DEDHAM DPW
DESIGN & CONSTRUCTION STANDARDS

SIDEWALK WITH GRASS STRIP

SCALE:	DATE OF ISSUE:
NTS	FEBRUARY 2011
REVISED:	
DETAIL NUMBER: RS.15	

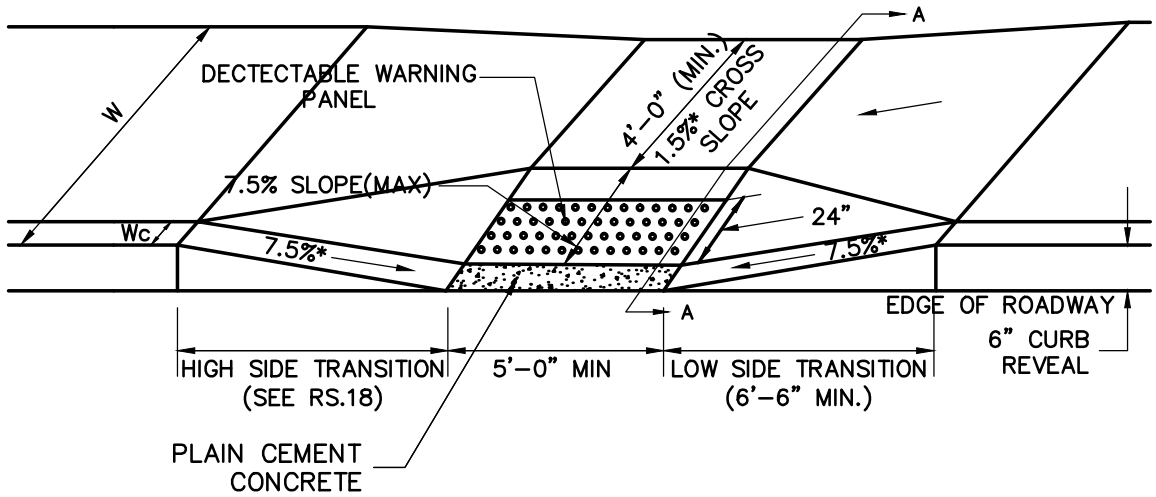

LEGEND

W = SIDEWALK WIDTH
Wc = CURB WIDTH
* = TOLERANCE FOR CONSTRUCTION ±0.5%

– USABLE SIDEWALK WIDTH PER AAB = W–Wc
– USABLE SIDEWALK WIDTH PER AAB IS NOT TO BE LESS THAN 4'–0"

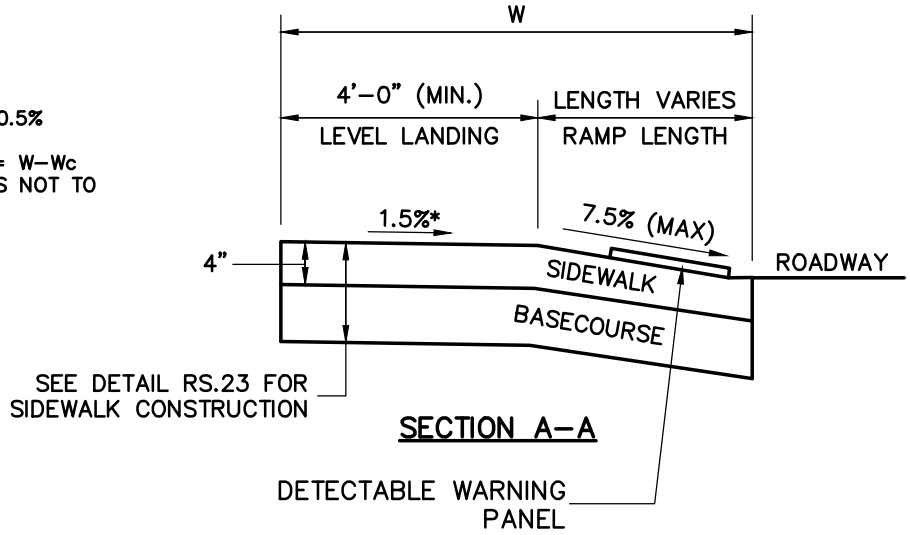

SIDEWALKS SHALL BE CONSTRUCTED IN CONFORMANCE WITH THE CURRENT REGULATIONS OF THE ARCHITECTURAL ACCESS BOARD, THE AMERICANS WITH DISABILITIES ACT AND THE CURRENT MASSHIGHWAY CONSTRUCTION STANDARDS.

UNLESS OTHERWISE NOTED, CONSTRUCTION METHODS, MATERIAL REQUIREMENTS AND METHOD OF MEASUREMENT SHALL BE IN ACCORDANCE WITH THE LATEST EDITION OF THE MASSACHUSETTS DEPARTMENT OF TRANSPORTATION (MASS DOT) STANDARD SPECIFICATIONS.

ALSO REFERENCE CURRENT MASS DOT CONSTRUCTION AND TRAFFIC STANDARD DETAILS.

	DEDHAM DPW **DESIGN & CONSTRUCTION STANDARDS** CONCRETE WHEELCHAIR RAMPS	SCALE: NTS	DATE OF ISSUE: FEBRUARY 2011
		REVISED:	
		DETAIL NUMBER: RS.16	

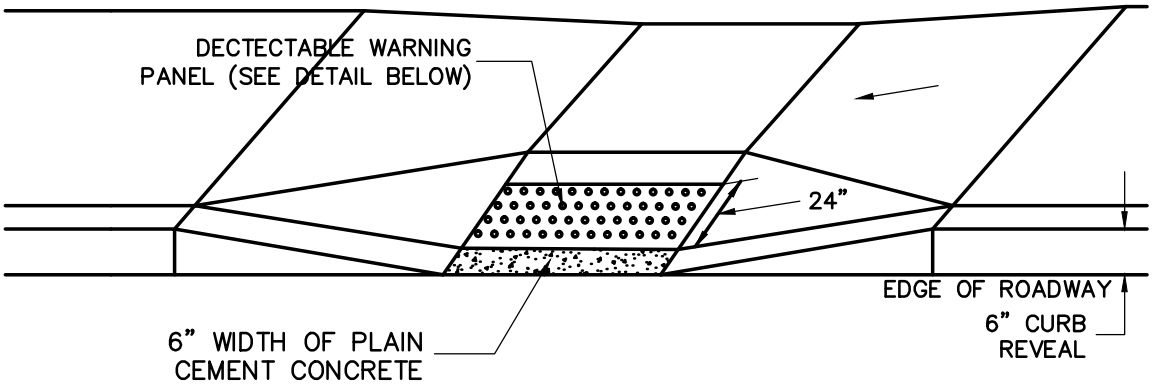

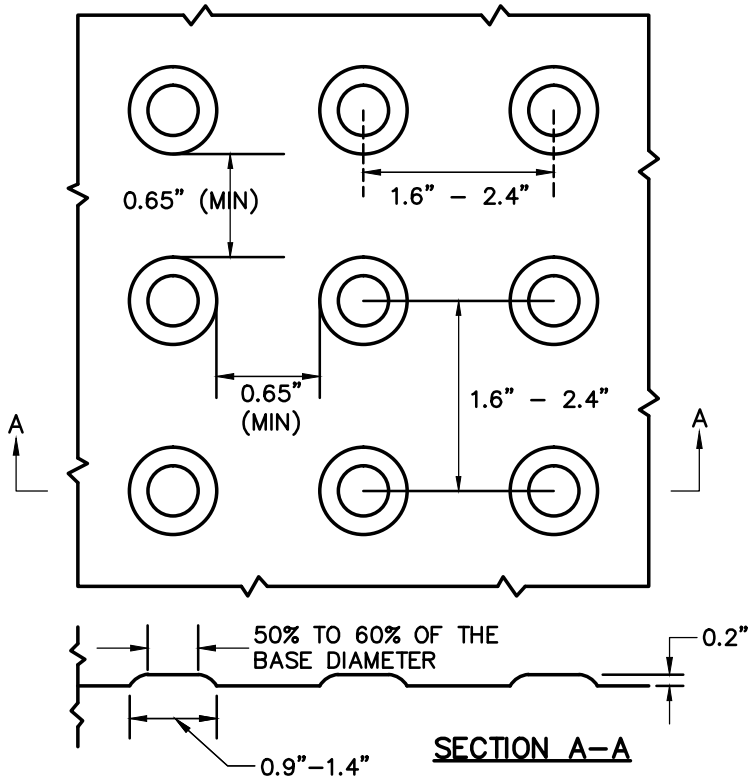

PANELS MAY BE CONCRETE PRECAST OR CAST IN PLACE OR OTHER SUITABLE MATERIAL PERMANENTLY APPLIED TO THE RAMP. DETECTABLE WARNING SURFACES SHALL CONTRAST VISUALLY WITH ADJACENT WALKING SURFACES EITHER LIGHT–ON–DARK OR DAR–ON–LIGHT.

	DEDHAM DPW **DESIGN & CONSTRUCTION STANDARDS** DETECTABLE WARNING PANELS FOR WHEELCHAIR RAMPS	SCALE: NTS	DATE OF ISSUE: FEBRUARY 2011
		REVISED:	
		DETAIL NUMBER: RS.17	

ROADWAY PROFILE GRADE (%)	*HIGH SIDE TRANSITION LENGTH
0	6'–6"
>0 TO 1	7'–8"
>1 TO 2	9'–0"
>2 TO 3	11'–0"
>3 TO 4	14'–0"
>4	15'–0" (MAX)

NOTE:

* BASED ON DESIGN SLOPE OF 7.5% AND A CURB REVEAL OF 6"

DEDHAM DPW
DESIGN & CONSTRUCTION STANDARDS

CURB TRANSITION LENGTH
FOR WHEELCHAIR RAMPS

SCALE:	DATE OF ISSUE:
NTS	FEBRUARY 2011

REVISED:

DETAIL NUMBER: RS.18

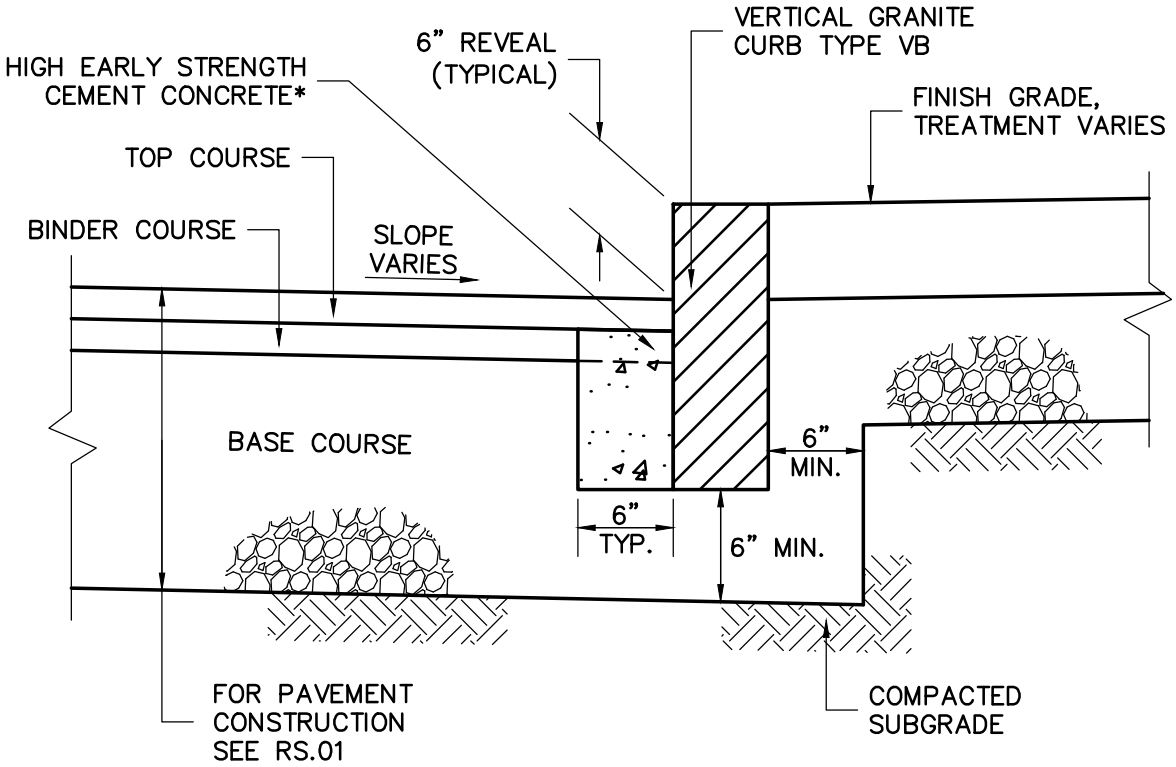

* – CEMENT CONCRETE TO BE USED IF CURB IS SET AFTER BASE AND/OR BINDER IS IN PLACE. PAYMENT FOR CEMENT CONCRETE SHALL BE INCLUDED IN THE PRICE PER LINEAR FOOT OF CURB.

	DEDHAM DPW **DESIGN & CONSTRUCTION STANDARDS** VERTICAL GRANITE CURB TYPE VB	SCALE: NTS	DATE OF ISSUE: FEBRUARY 2011
		REVISED:	
		DETAIL NUMBER: RS.19	

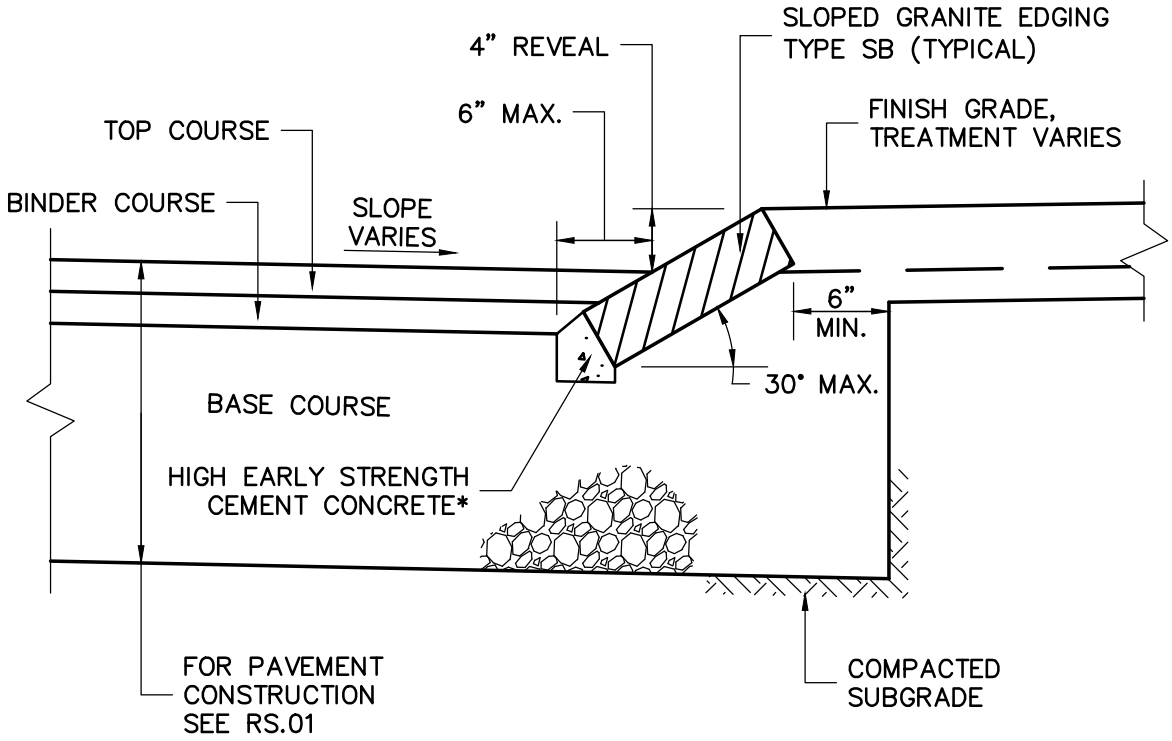

* – GRAVEL BASECOURSE TO BE PLACED PRIOR TO SETTING EDGING. PAYMENT FOR CEMENT CONCRETE SHALL BE INCLUDED IN THE PRICE PER LINEAR FOOT OF EDGING.

	DEDHAM DPW **DESIGN & CONSTRUCTION STANDARDS** SLOPED GRANITE EDGING	SCALE: NTS	DATE OF ISSUE: FEBRUARY 2011
		REVISED:	
		DETAIL NUMBER: RS.20	

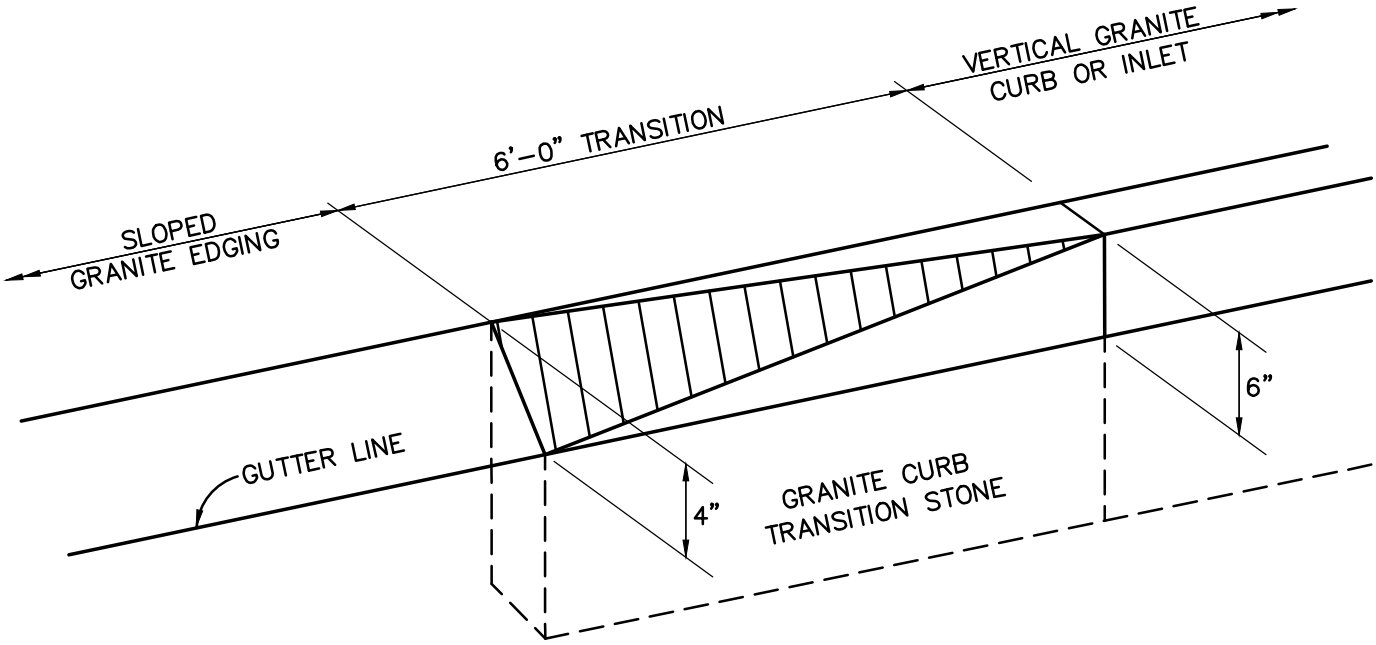

	DEDHAM DPW **DESIGN & CONSTRUCTION STANDARDS** GRANITE CURB TO SLOPED EDGING TRANSITION	SCALE: NTS	DATE OF ISSUE: FEBRUARY 2011
		REVISED:	
		DETAIL NUMBER: RS.21	

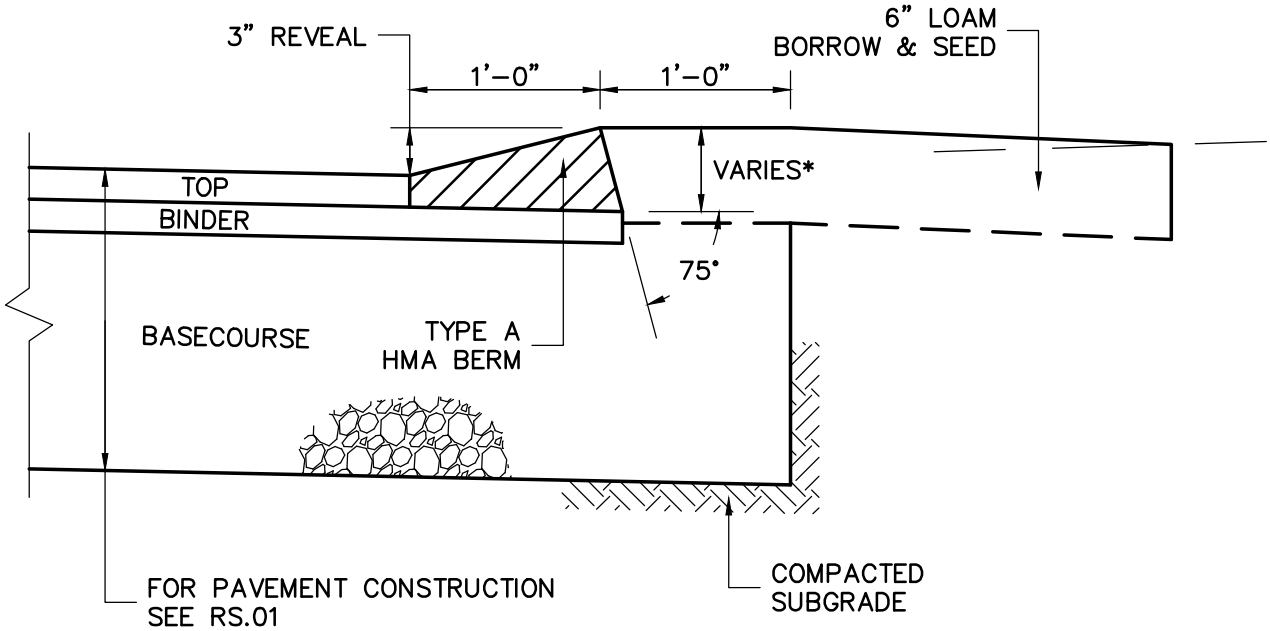

* – DEPTH VARIES WITH TOP COURSE THICKNESS AND ROADWAY CROSS SLOPE

NOTE: HOT MIX ASPHALT BERM – TYPE "A" NOT ACCEPTABLE ABUTTING SIDEWALKS.

	DEDHAM DPW **DESIGN & CONSTRUCTION STANDARDS** HOT MIX ASPHALT BERM – TYPE "A"	SCALE: NTS	DATE OF ISSUE: FEBRUARY 2011
		REVISED:	
		DETAIL NUMBER: RS.22	

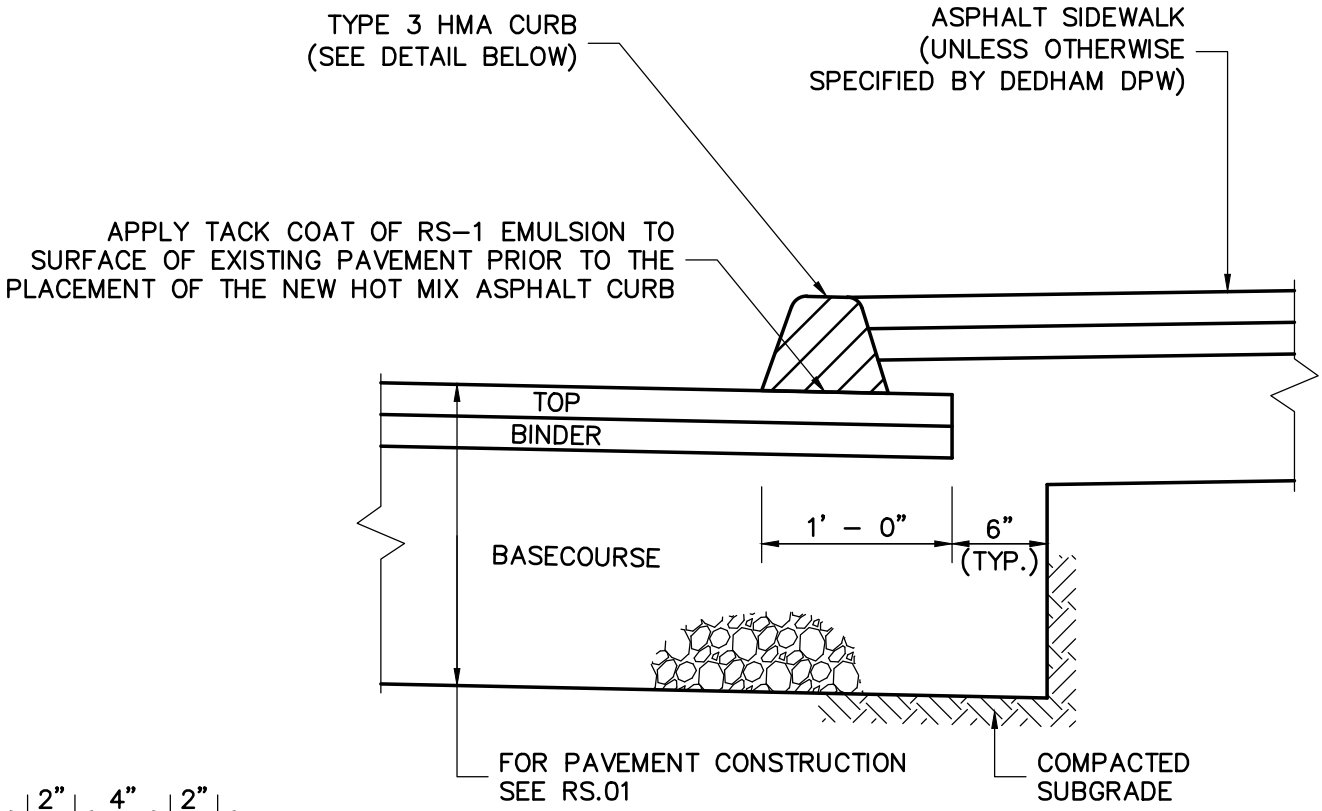

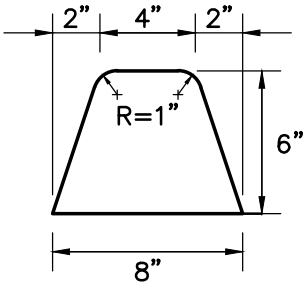

	DEDHAM DPW **DESIGN & CONSTRUCTION STANDARDS** HOT MIX ASPHALT CURB – TYPE 3	SCALE: NTS	DATE OF ISSUE: FEBRUARY 2011
		REVISED:	
		DETAIL NUMBER: RS.23	

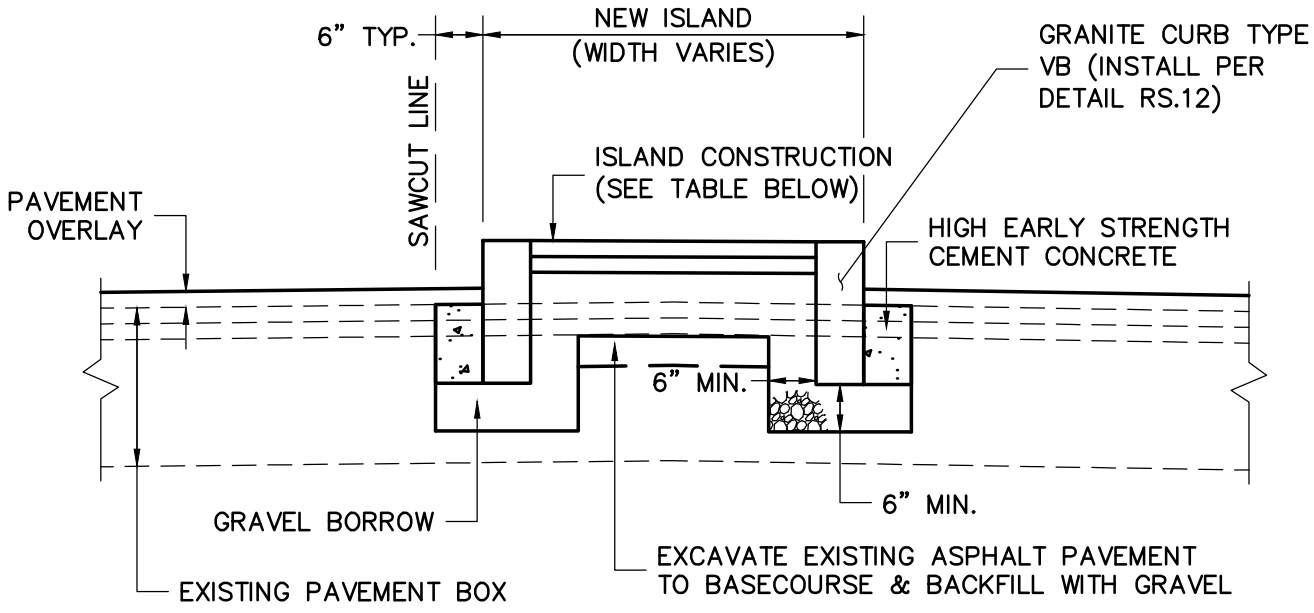

	ISLAND CONSTRUCTION	
	CEMENT CONCRETE CONSTRUCTION	HOT MIX ASPHALT
SURFACE:	4" CEMENT CONCRETE (4000 PSI, 3/4", 610)	2.5" HOT MIX ASPHALT (1.25" TOP COURSE MATERIAL OVER 1.25" BINDER COURSE MATERIAL)
BASECOURSE:	8" GRAVEL BORROW (TYPE "B")	8" GRAVEL BORROW (TYPE "B")

DEDHAM DPW
DESIGN & CONSTRUCTION STANDARDS

TRAFFIC ISLAND – VERTICAL CURBING

SCALE:	DATE OF ISSUE:
NTS	FEBRUARY 2011
REVISED:	
DETAIL NUMBER: RS.24	

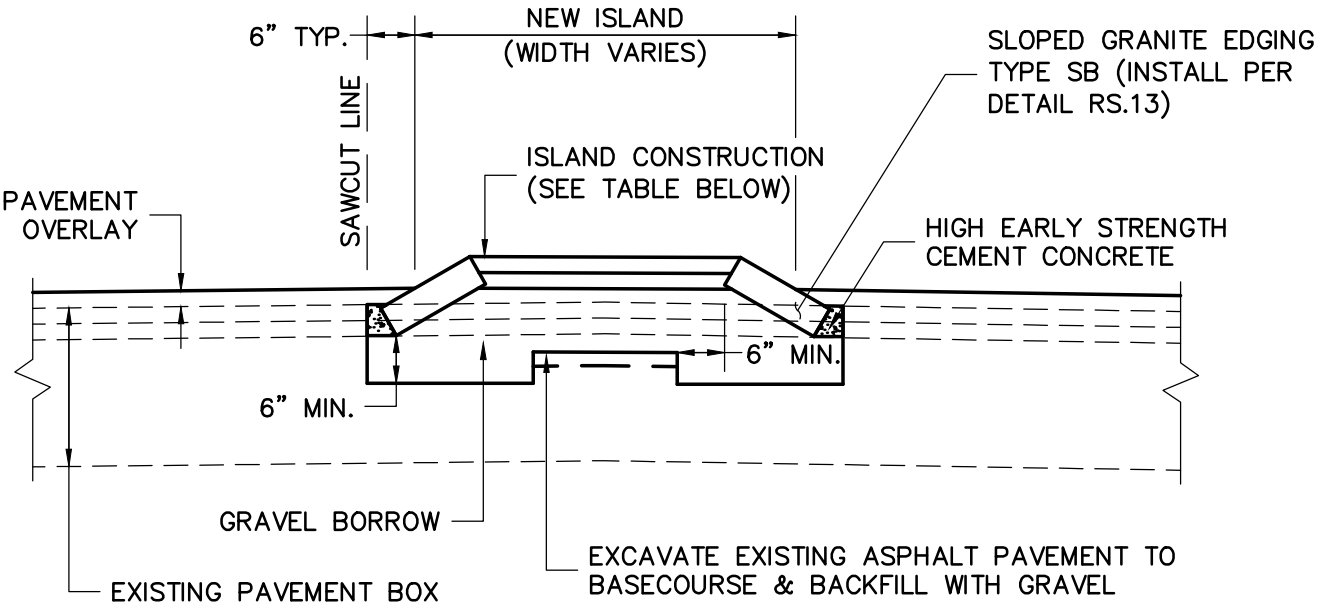

	ISLAND CONSTRUCTION	
	CEMENT CONCRETE CONSTRUCTION	HOT MIX ASPHALT
SURFACE:	4" CEMENT CONCRETE (4000 PSI, 3/4", 610)	2.5" HOT MIX ASPHALT (1.25" TOP COURSE MATERIAL OVER 1.25" BINDER COURSE MATERIAL)
BASECOURSE:	8" GRAVEL BORROW (TYPE "B")	8" GRAVEL BORROW (TYPE "B")

DEDHAM DPW
DESIGN & CONSTRUCTION STANDARDS

TRAFFIC ISLAND – SLOPED EDGING

SCALE:	DATE OF ISSUE:
NTS	FEBRUARY 2011
REVISED:	
DETAIL NUMBER: RS.25	

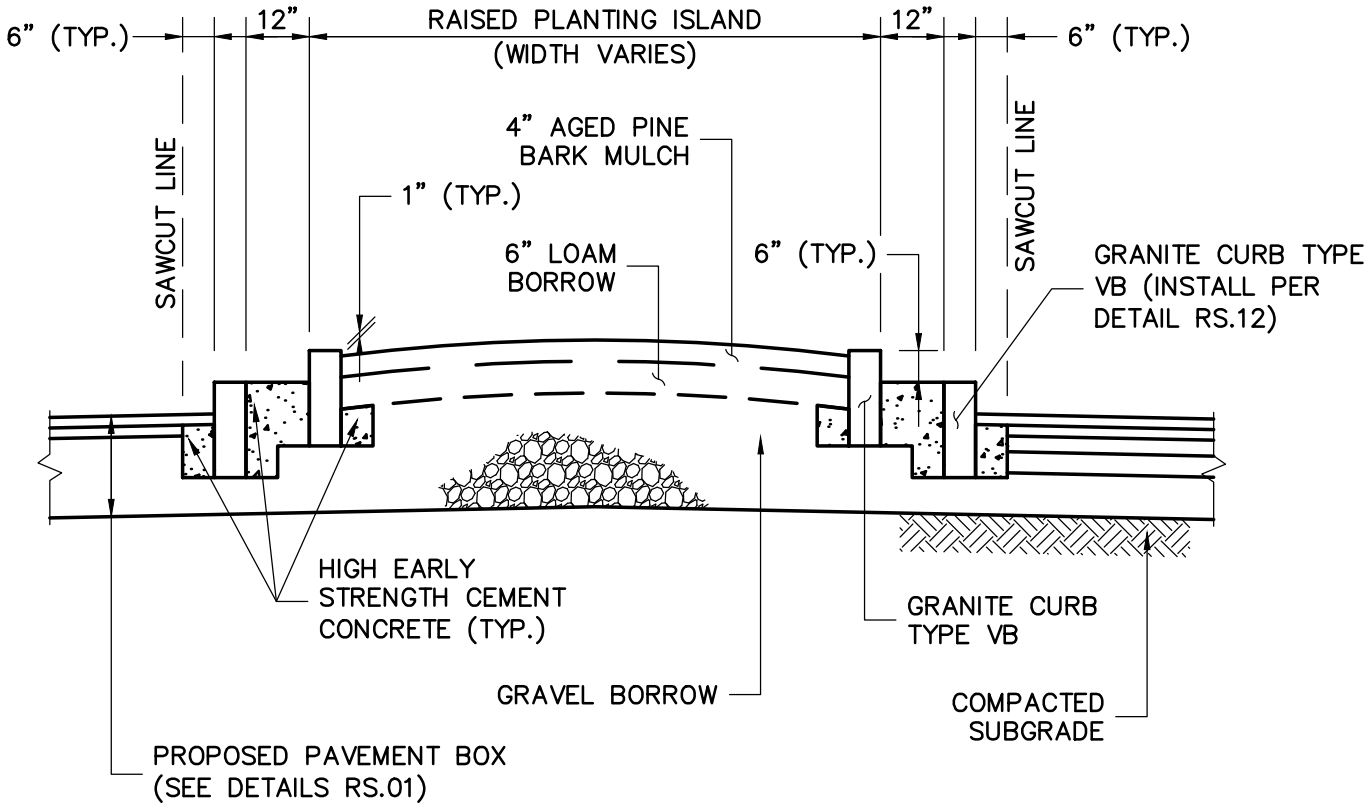

	DEDHAM DPW **DESIGN & CONSTRUCTION STANDARDS** RAISED PLANTING ISLAND	SCALE: NTS	DATE OF ISSUE: FEBRUARY 2011
		REVISED:	
		DETAIL NUMBER: RS.26	

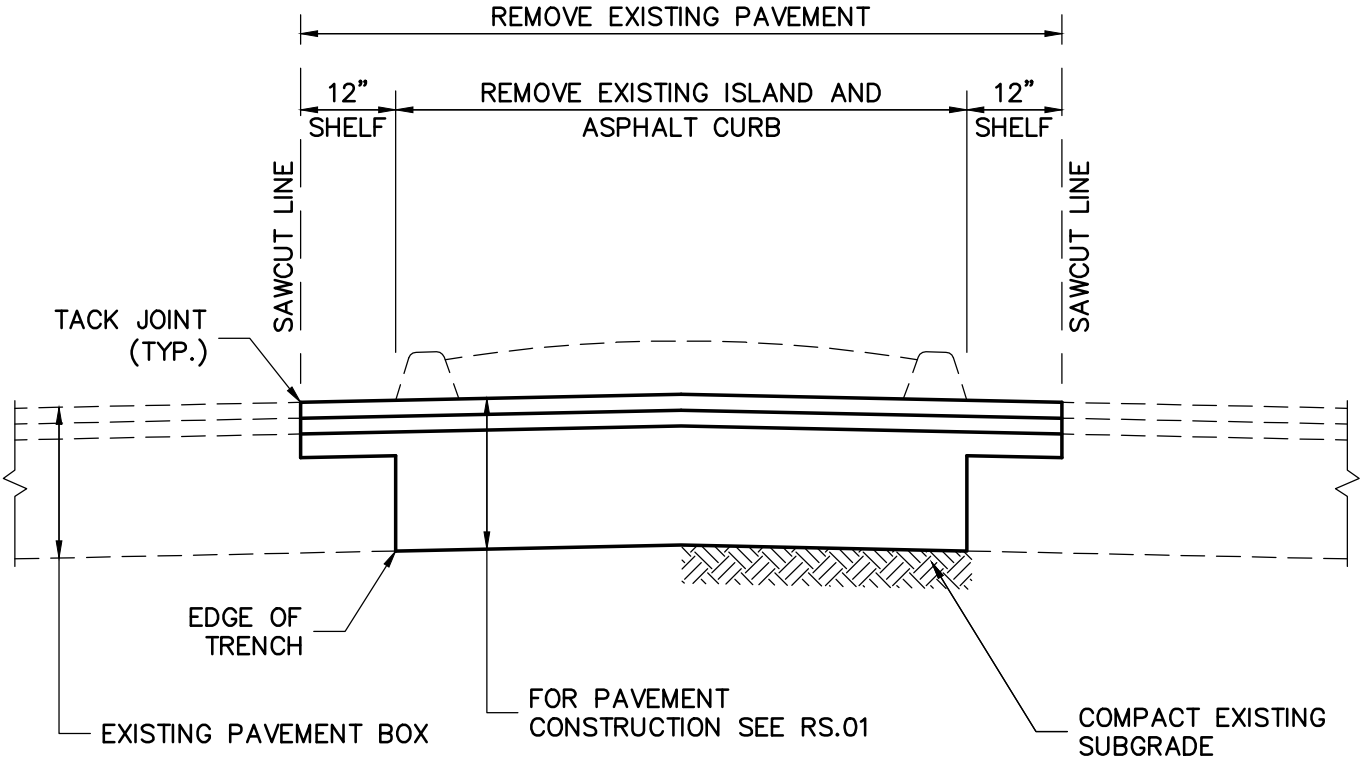

DEDHAM DPW
DESIGN & CONSTRUCTION STANDARDS

ISLAND REMOVAL

SCALE:	DATE OF ISSUE:
NTS	FEBRUARY 2011
REVISED:	
DETAIL NUMBER: RS.27	

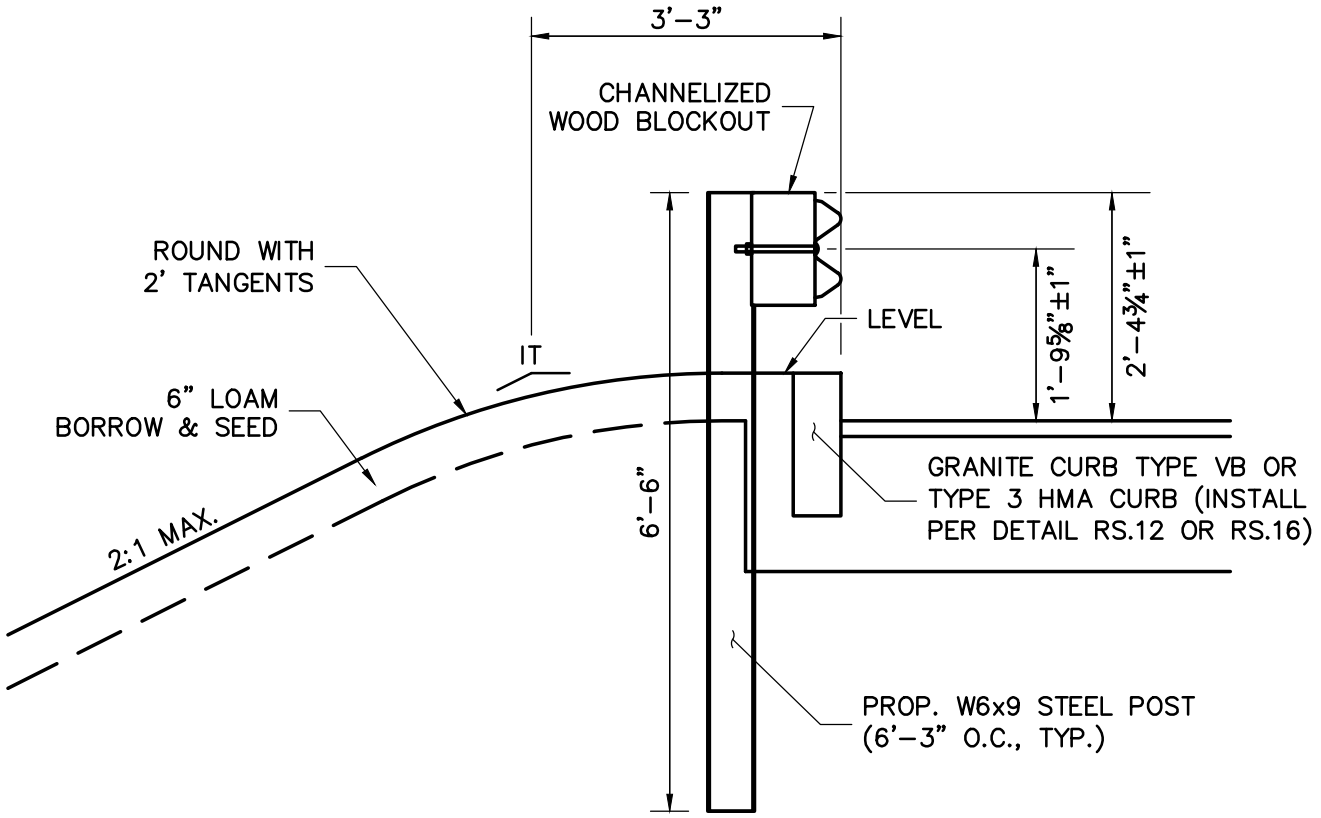

STEEL POST SHOWN

NOTES:

1. ALL GUARDRAIL SHALL BE INSTALLED IN ACCORDANCE WITH THE LATEST MASS DOT CONSTRUCTION STANDARDS.
2. GUARDRAIL SHALL BE GALVANIZED STEEL W BEAM HIGHWAY GUARD WITH GALVANIZED STEEL POSTS OR COR–TEN WEATHERING STEEL BEAM HIGHWAY GUARD WITH TREATED WOOD POSTS. THE TYPE OF GUARDRAIL TO BE USED WILL BE SPECIFIED BY THE DEDHAM DPW.
3. REGARDLESS OF POST TYPE USED, WHERE FULL 3'–3" OFFSET TO THE INTERSECTION OF TANGENTS (IT) IS NOT FEASIBLE DUE TO SITE CONSTRAINTS, THE POST LENGTH SHALL BE INCREASED TO 8'–0".

	DEDHAM DPW **DESIGN & CONSTRUCTION STANDARDS** STEEL W BEAM HIGHWAY GUARD (SINGLE FACED) VERTICAL GRAN. CURB OR ASPHALT CURB	SCALE: NTS	DATE OF ISSUE: FEBRUARY 2011
		REVISED:	
		DETAIL NUMBER: RS.28	

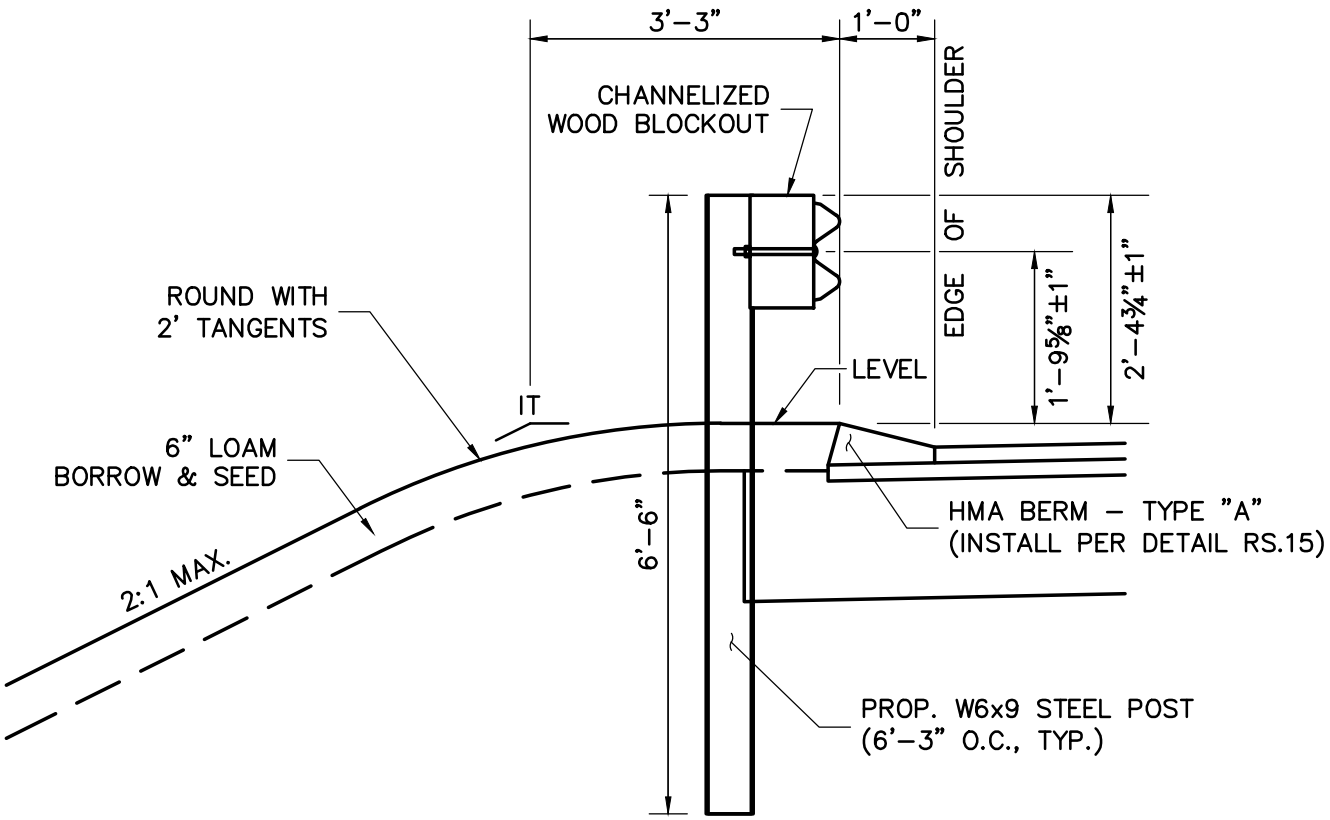

STEEL POST SHOWN

NOTES:

1. ALL GUARDRAIL SHALL BE INSTALLED IN ACCORDANCE WITH THE LATEST MASS DOT CONSTRUCTION STANDARDS.
2. GUARDRAIL SHALL BE GALVANIZED STEEL W BEAM HIGHWAY GUARD WITH GALVANIZED STEEL POSTS OR COR–TEN WEATHERING STEEL BEAM HIGHWAY GUARD WITH TREATED WOOD POSTS. THE TYPE OF GUARDRAIL TO BE USED WILL BE SPECIFIED BY THE DEDHAM DPW.
3. REGARDLESS OF POST TYPE USED, WHERE FULL 3'–3" OFFSET TO THE INTERSECTION OF TANGENTS (IT) IS NOT FEASIBLE DUE TO SITE CONSTRAINTS, THE POST LENGTH SHALL BE INCREASED TO 8'–0".

	DEDHAM DPW **DESIGN & CONSTRUCTION STANDARDS** STEEL W BEAM HIGHWAY GUARD (SINGLE FACED) HOT MIX ASPHALT BERM – TYPE "A"	SCALE: NTS	DATE OF ISSUE: FEBRUARY 2011
		REVISED:	
		DETAIL NUMBER: RS.29	

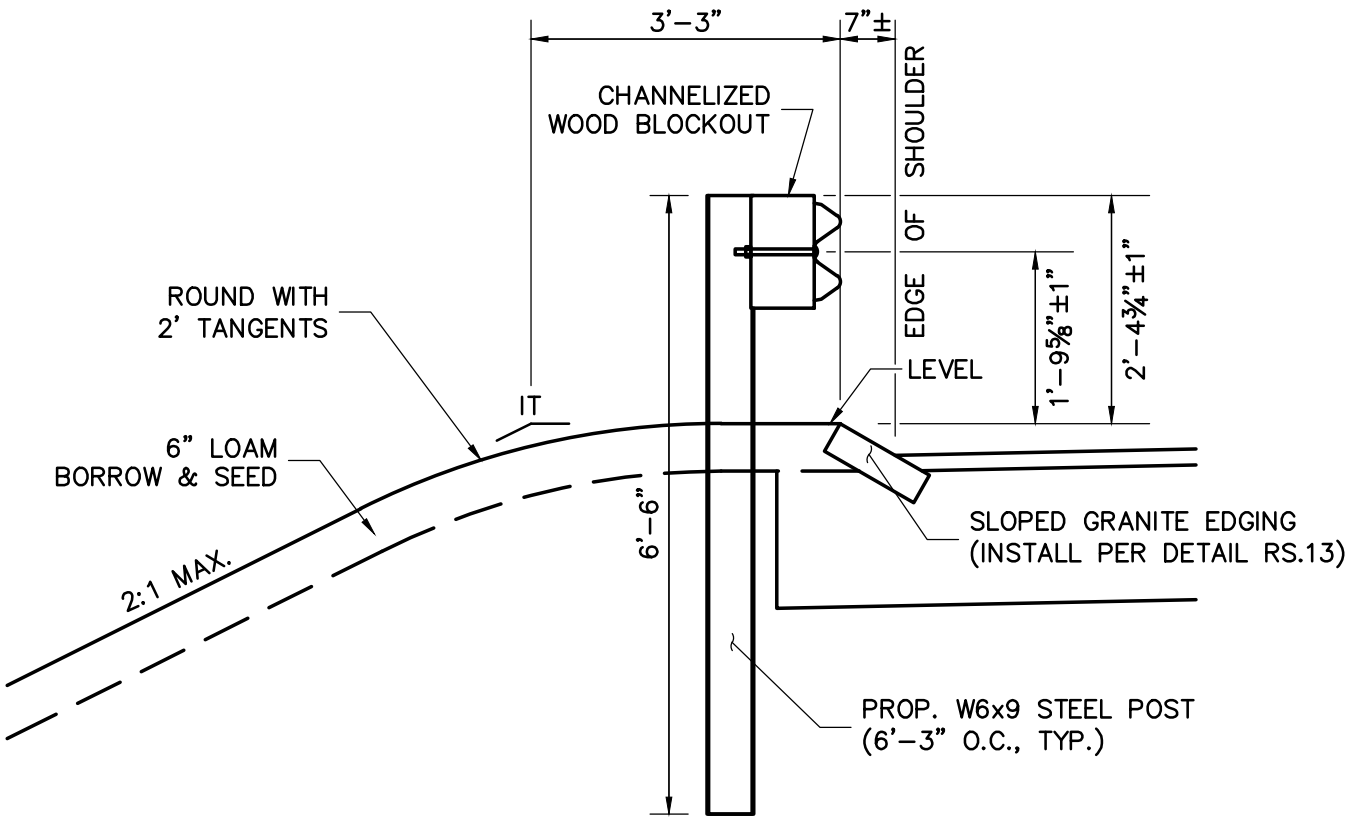

STEEL POST SHOWN

NOTES:

1. ALL GUARDRAIL SHALL BE INSTALLED IN ACCORDANCE WITH THE LATEST MASS DOT CONSTRUCTION STANDARDS.
2. GUARDRAIL SHALL BE GALVANIZED STEEL W BEAM HIGHWAY GUARD WITH GALVANIZED STEEL POSTS OR COR–TEN WEATHERING STEEL BEAM HIGHWAY GUARD WITH TREATED WOOD POSTS. THE TYPE OF GUARDRAIL TO BE USED WILL BE SPECIFIED BY THE DEDHAM DPW.
3. REGARDLESS OF POST TYPE USED, WHERE FULL 3'–3" OFFSET TO THE INTERSECTION OF TANGENTS (IT) IS NOT FEASIBLE DUE TO SITE CONSTRAINTS, THE POST LENGTH SHALL BE INCREASED TO 8'–0".

	DEDHAM DPW **DESIGN & CONSTRUCTION STANDARDS** STEEL W BEAM HIGHWAY GUARD (SINGLE FACED) SLOPED GRANITE EDGING	SCALE: NTS	DATE OF ISSUE: FEBRUARY 2011
		REVISED:	
		DETAIL NUMBER: RS.30	

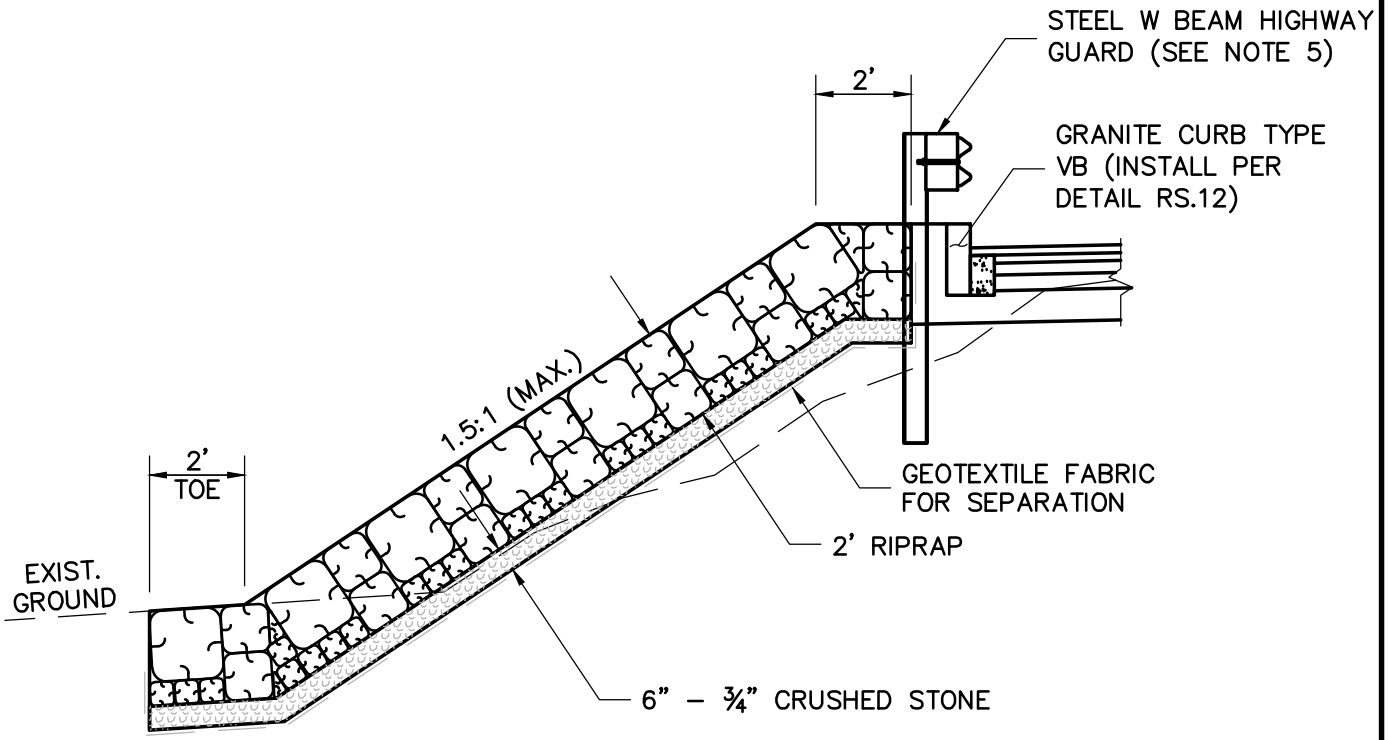

NOTES:

1. SLOPES STEEPER THAN 1.5:1 REQUIRE DESIGN BY GEOTECHNICAL ENGINEER REGISTERED IN THE COMMONWEALTH OF MASSACHUSETTS.
2. GEOTEXTILE FABRIC TO CONFORM TO AASHTO M 288.
3. CRUSHED STONE TO CONFORM TO MASSHIGHWAY M.2.01.4.
4. RIPRAP TO CONFORM TO MASSHIGHWAY M2.02.0.
5. GUARDRAIL IS REQUIRED FOR ALL RIPRAP SLOPES ADJACENT TO TO ROADWAY. DEPENDING ON PRESENCE AND TYPE OF CURBING, INSTALL GUARDRAIL PER DETAIL RS.28, RS.29 RS.30.

DEDHAM DPW
DESIGN & CONSTRUCTION STANDARDS

RIPRAP SLOPE

SCALE: NTS

DATE OF ISSUE: FEBRUARY 2011

REVISED:

DETAIL NUMBER: RS.31

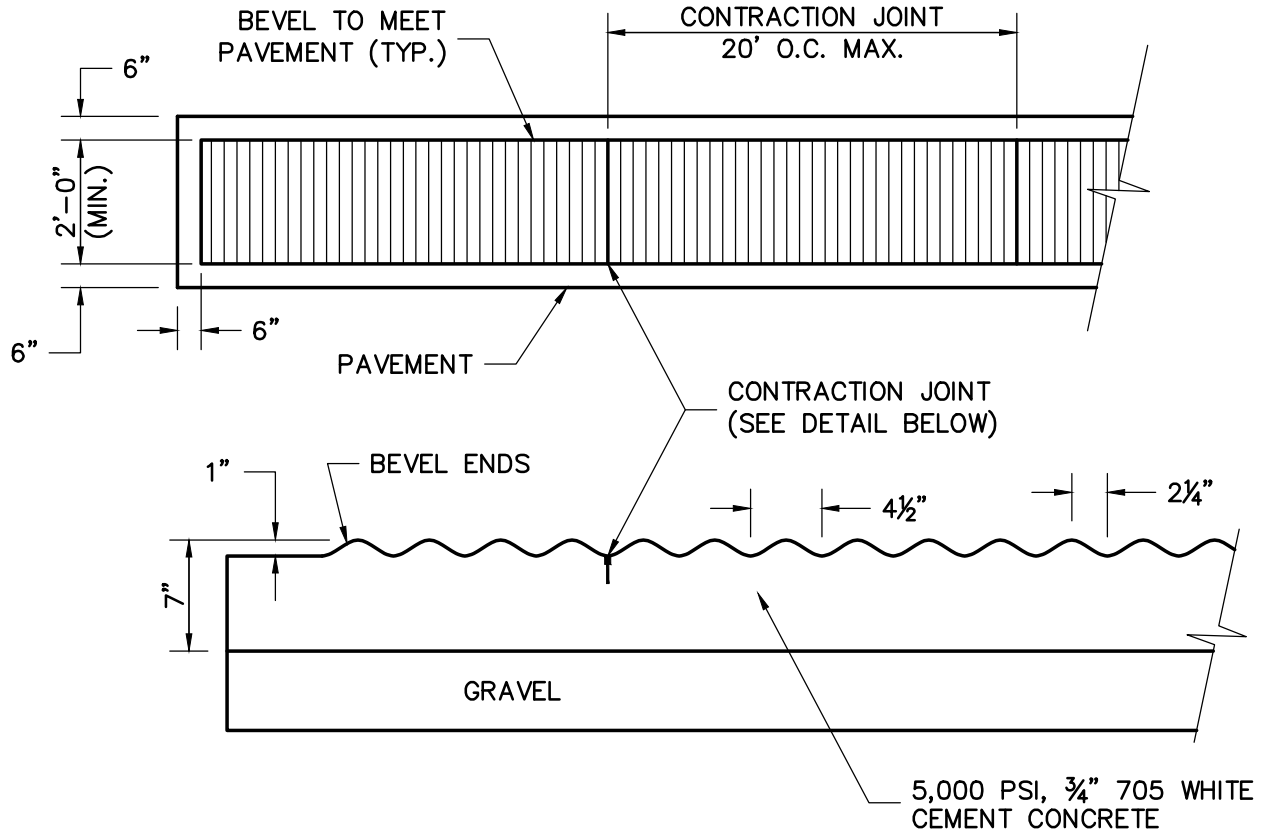

NOTES:

1. CONTRACTION JOINTS ARE TO BE PLACED AT A MAXIMUM OF 20 FEET APART.
2. JOINTS SHALL BE SAWN IN THE DEPRESSIONS AS SHOWN IN THE DETAIL AND IN ACCORDANCE WITH SUBSECTION 476.88C OF THE STANDARD SPECIFICATIONS.
3. END OF CORRUGATED RIDGES TO BE BEVELED WITH APPROPRIATE TOOL FOR UNIFORM SIZE AND SHAPE. HAND SCORING IS NOT ACCEPTABLE.
4. DEPTH OF GRAVEL TO BE SUCH THAT ITS BOTTOM LINE MEETS THE BOTTOM OF THE GRAVEL OF THE CONTIGUOUS PAVEMENT.

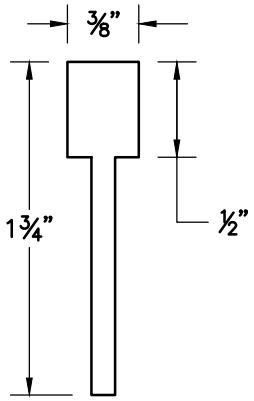

	DEDHAM DPW **DESIGN & CONSTRUCTION STANDARDS** SCORED CONCRETE PAVEMENT	SCALE: NTS	DATE OF ISSUE: FEBRUARY 2011
		REVISED:	
		DETAIL NUMBER: RS.32	

STORM DRAIN & STORM WATER MANAGEMENT

DESCRIPTION	DETAIL NUMBER
CATCH BASIN	
FRAME & GRATE	SDSW.01
PRECAST CONCRETE CATCH BASIN	SDSW.02
OIL & DEBRIS TRAP – SNOUT 18R INSTALLATION DETAILS	SDSW.02A
ALTERNATE TYPE CATCH BASIN (SECTION)	SDSW.03
ALTERNATE TYPE CATCH BASIN (PLAN)	SDSW.03A
ALTERNATE TYPE CATCH BASIN (NOTES)	SDSW.03B
GRANITE CURB INLET	SDSW.04
CONCRETE BLOCK GUTTER INLET	SDSW.05
LEACHING BASIN	SDSW.06
ENVIRONMENTAL PLACARD	
DRAINS TO CHARLES RIVER	SDSW.07
DRAINS TO NEPONSET RIVER	SDSW.08
PRECAST DRAIN MANHOLE	SDSW.09
DRAINAGE END & SLOPE TREATMENTS	
CONCRETE OR FIELD STONE MASONRY ENDS	SDSW.10
FLARED END SECTION	SDSW.11
OUTLET EROSION PROTECTION	SDSW.12
RIPRAP VELOCITY DISSIPATER	SDSW.13
STONE PROTECTION OUTLET	SDSW.14
RIPRAP DITCH	SDSW.15
TRENCHES	
DRAINAGE TRENCH	SDSW.16
TRAFFIC SIGNAL CONDUIT	SDSW.17

DEDHAM DPW
DESIGN & CONSTRUCTION STANDARDS

DETAIL INDEX
STORM DRAIN & STORM WATER MANAGEMENT

SCALE:	DATE OF ISSUE:
NTS	FEBRUARY 2011
REVISED:	
DETAIL NUMBER: SDSW–INDEX.01	

STORM DRAIN & STORM WATER MANAGEMENT CONTINUED

DESCRIPTION	DETAIL NUMBER
TRENCH RESTORATION DETAILS	
SHALLOW EXCAVATION IN ASPHALT PAVEMENT	SDSW.18
DEEP EXCAVATION IN ASPHALT PAVEMENT	SDSW.19
PAVEMENT RESTORATION FOR UTILITY TRENCHING IN CRACKED PAVEMENT AREAS	SDSW.20
EROSION CONTROL PROTECTION	
SILTATION FENCE	SDSW.21
BALES OF HAY & SILTATION FENCE	SDSW.22
DRAIN INLET PROTECTION	SDSW.23
STORM WATER MANAGEMENT	
TYPICAL DETENTION BASIN (PLAN VIEW)	SDSW.24
TYPICAL DETENTION BASIN (ON SLOPING GRADE)	SDSW.25
TYPICAL MULTI-INLET CONTROL STRUCTURE	SDSW.26
TYPICAL SEDIMENT FOREBAY	SDSW.27
ANTI-SEEPAGE COLLAR	SDSW.28
TYPICAL DISCHARGE LEVEL SPREADER	SDSW.29
WATER QUALITY INLET	SDSW.30
WATER QUALITY INLET BAFFLE WALL DETAILS	SDSW.30A
V-NOTCHED WEIR	SDSW.31
TYPICAL VEGETATED DITCH	SDSW.32
TYPICAL EMERGENCY OVERFLOW SPILLWAY	SDSW.33
MANHOLE FRAME & COVER MARKED DRAIN	SDSW.34

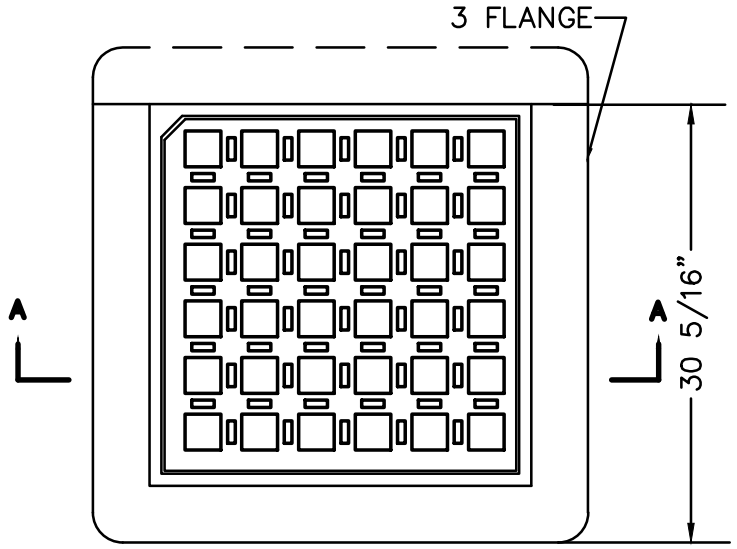

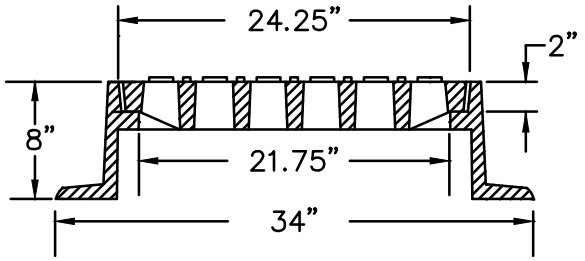

SECTION A–A

NOTE:

FRAME AND GRATE SHALL BE EAST JORDAN IRON WORKS CATALOG NOS. 5520M5 & 5524Z FOR THE 4 FLANGE AND CATALOG NOS. 5520M5 & 5523Z FOR THE 3 FLANGE, OR APPROVED EQUAL.

UNLESS OTHERWISE NOTED, CONSTRUCTION METHODS, MATERIAL REQUIREMENTS AND METHOD OF MEASUREMENT SHALL BE IN ACCORDANCE WITH THE LATEST EDITION OF THE MASSACHUSETTS DEPARTMENT OF TRANSPORTATION (MASS DOT) STANDARD SPECIFICATIONS.

ALSO REFERENCE CURRENT MASS DOT CONSTRUCTION AND TRAFFIC STANDARD DETAILS.

DEDHAM DPW
DESIGN & CONSTRUCTION STANDARDS

CATCH BASIN FRAME & GRATE

SCALE:	DATE OF ISSUE:
NTS	FEBRUARY 2011
REVISED:	
DETAIL NUMBER: SDSW.01	

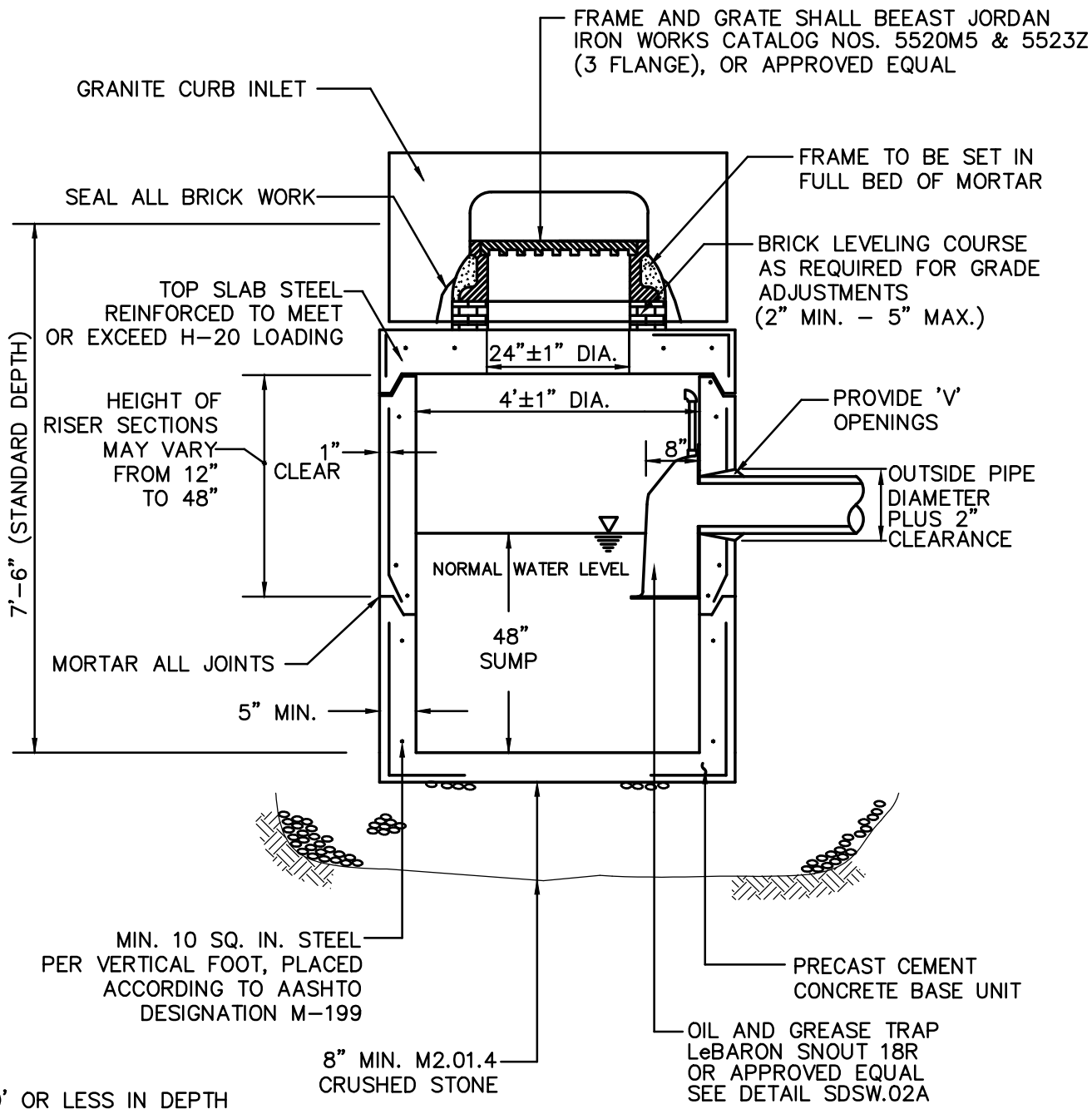

UNLESS OTHERWISE NOTED, CONSTRUCTION METHODS, MATERIAL REQUIREMENTS AND METHOD OF MEASUREMENT SHALL BE IN ACCORDANCE WITH THE LATEST EDITION OF THE MASSACHUSETTS DEPARTMENT OF TRANSPORTATION (MASS DOT) STANDARD SPECIFICATIONS.

ALSO REFERENCE CURRENT MASS DOT CONSTRUCTION AND TRAFFIC STANDARD DETAILS.

	DEDHAM DPW **DESIGN & CONSTRUCTION STANDARDS** PRECAST CONCRETE CATCH BASIN	SCALE: NTS	DATE OF ISSUE: FEBRUARY 2011
		REVISED:	
		DETAIL NUMBER: SDSW.02	

INSTALLATION DETAIL

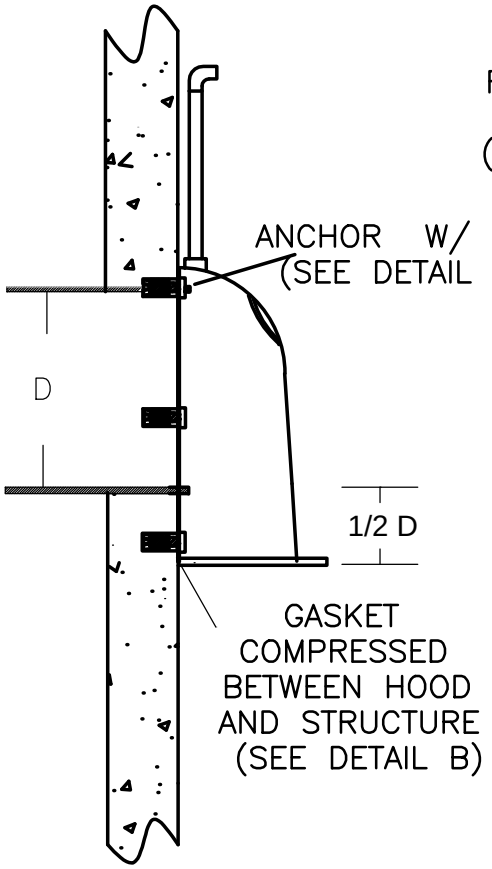

DETAIL B

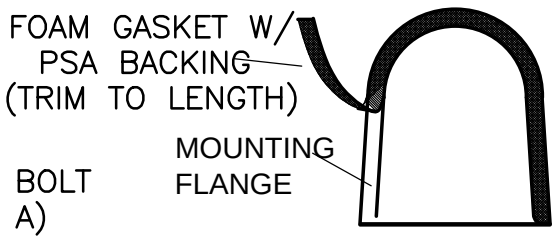

INSTALLATION NOTE:

POSITION HOOD SUCH THAT BOTTOM FLANGE IS A DISTANCE OF 1/2 OUTLET PIPE DIAMETER (MIN.) BELOW THE PIPE INVERT. MINUMUM DISTANCE FOR PIPES < 12" I.D. IS 6".

DETAIL A

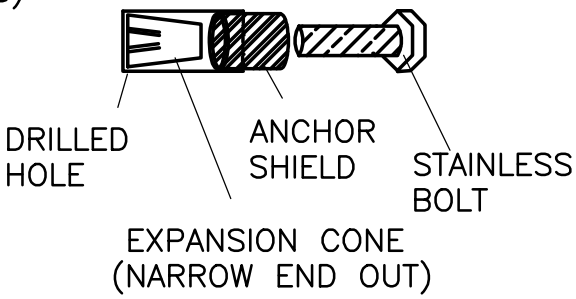

UNLESS OTHERWISE NOTED, CONSTRUCTION METHODS, MATERIAL REQUIREMENTS AND METHOD OF MEASUREMENT SHALL BE IN ACCORDANCE WITH THE LATEST EDITION OF THE MASSACHUSETTS DEPARTMENT OF TRANSPORTATION (MASS DOT) STANDARD SPECIFICATIONS.

ALSO REFERENCE CURRENT MASS DOT CONSTRUCTION AND TRAFFIC STANDARD DETAILS.

DEDHAM DPW
DESIGN & CONSTRUCTION STANDARDS

OIL AND DEBRIS TRAP
SNOUT 18R INSTALLATION DETAILS

SCALE:	DATE OF ISSUE:
NTS	FEBRUARY 2011
REVISED:	
DETAIL NUMBER:	SDSW.02A

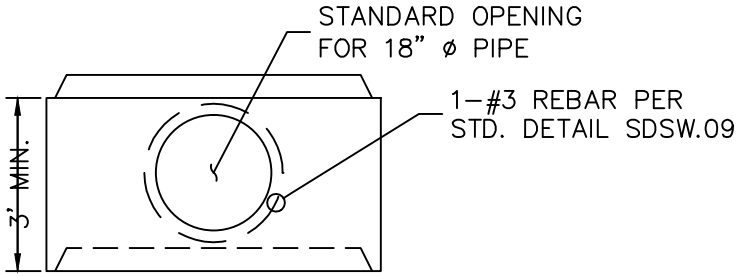

INLET RISER

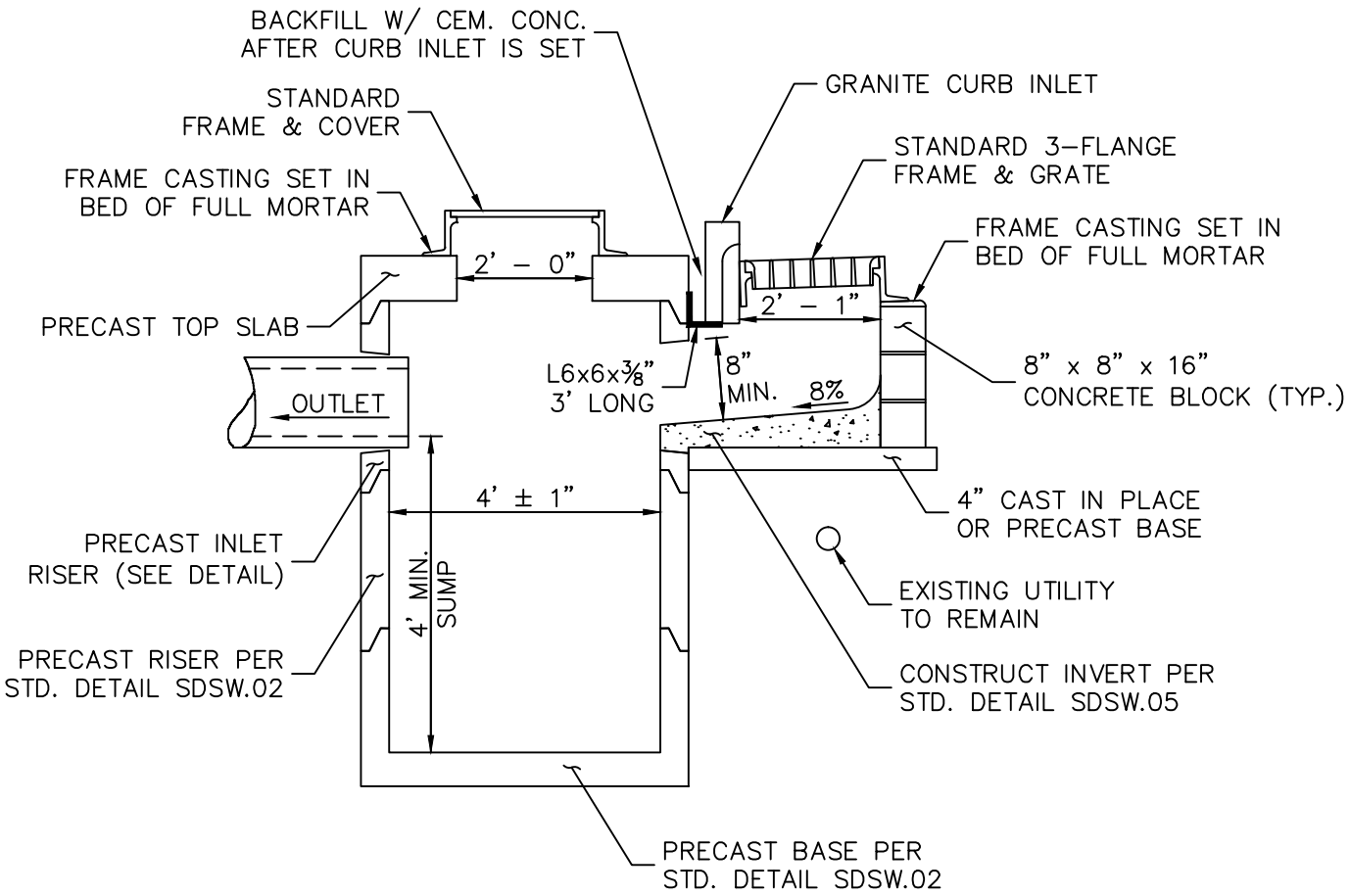

SECTION

UNLESS OTHERWISE NOTED, CONSTRUCTION METHODS, MATERIAL REQUIREMENTS AND METHOD OF MEASUREMENT SHALL BE IN ACCORDANCE WITH THE LATEST EDITION OF THE MASSACHUSETTS DEPARTMENT OF TRANSPORTATION (MASS DOT) STANDARD SPECIFICATIONS.

ALSO REFERENCE CURRENT MASS DOT CONSTRUCTION AND TRAFFIC STANDARD DETAILS.

	DEDHAM DPW **DESIGN & CONSTRUCTION STANDARDS** ALTERNATE TYPE CATCH BASIN SECTION	SCALE: NTS	DATE OF ISSUE: FEBRUARY 2011
		REVISED:	
		DETAIL NUMBER: SDSW.03	

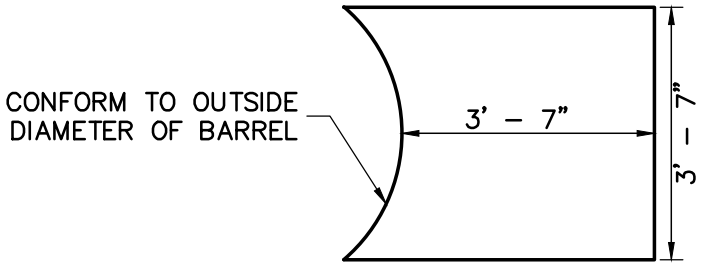

BASE DIMENSIONS

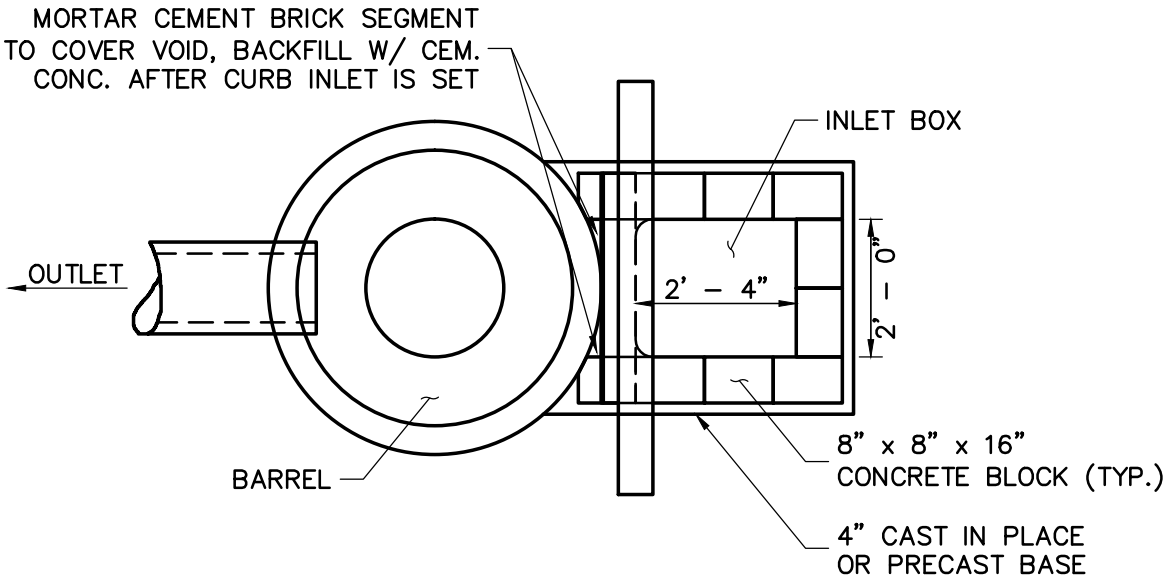

PLAN

UNLESS OTHERWISE NOTED, CONSTRUCTION METHODS, MATERIAL REQUIREMENTS AND METHOD OF MEASUREMENT SHALL BE IN ACCORDANCE WITH THE LATEST EDITION OF THE MASSACHUSETTS DEPARTMENT OF TRANSPORTATION (MASS DOT) STANDARD SPECIFICATIONS.

ALSO REFERENCE CURRENT MASS DOT CONSTRUCTION AND TRAFFIC STANDARD DETAILS.

	DEDHAM DPW **DESIGN & CONSTRUCTION STANDARDS** ALTERNATE TYPE CATCH BASIN PLAN	SCALE: NTS	DATE OF ISSUE: FEBRUARY 2011
		REVISED:	
		DETAIL NUMBER: SDSW.03A	

ALTERNATE TYPE CATCH BASIN NOTES:

1. ALTERNATE TYPE CATCH BASINS ARE TO BE USED AT LOCATIONS WHERE A STANDARD CATCH BASIN WOULD REQUIRE THE RELOCATION OF AN EXISTING UTILITY.

2. REINFORCEMENT IN BARREL SECTIONS SHALL BE AS SHOWN IN STANDARD DETAIL SDSW.02

3. THE 6x6x⅜ INCH ANGLE SHALL BE GALVANIZED IN ACCORDANCE WITH AASHTO M111.

4. BRICKS MAY BE USED TO ADJUST THE GRADE OF THE FRAMES.

5. THE CURB INLET SHALL BE SET IN A FULL BED OF MORTAR ON THE STEEL ANGLE. THE MINIMUM WIDTH OF BEARING OF THE CURB INLET ON THE STEEL ANGLE SHALL BE 3 INCHES.

6. THE OUTLET IS NOT NECESSARILY LOCATED WITHIN THE INLET RISER AND IS NOT NECESSARILY LOCATED OPPOSITE FROM THE INLET. THE CONTRACTOR IS SOLELY RESPONSIBLE FOR DETERMINING THE RELATIVE LOCATIONS OF THE INLET AND OUTLET PRIOR TO ORDERING.

7. THE OUTLET PIPE SHALL NOT PROJECT MORE THAN 4 INCHES FROM THE FACE OF THE INTERIOR WALL ALONG THE CENTERLINE OF THE PIPE.

8. CONCRETE BLOCKS IN THE INLET BOX SHALL BE SET IN A FULL BED OF MORTAR. ALL HORIZONTAL AND VERTICAL JOINTS SHALL BE FLUSHED FULL OF MORTAR.

9. A MINIMUM CLEARANCE BETWEEN THE TOP OF THE 18 INCH OPENING IN THE INLET RISER AND THE INVERT OF THE INLET BOX IS 8 INCHES. THE NUMBER OF ROWS OF CONCRETE BLOCKS IN THE INLET BOX MAY BE MODIFIED DEPENDING ON THE ELEVATION OF THE UTILITY TO BE MAINTAINED.

UNLESS OTHERWISE NOTED, CONSTRUCTION METHODS, MATERIAL REQUIREMENTS AND METHOD OF MEASUREMENT SHALL BE IN ACCORDANCE WITH THE LATEST EDITION OF THE MASSACHUSETTS DEPARTMENT OF TRANSPORTATION (MASS DOT) STANDARD SPECIFICATIONS.

ALSO REFERENCE CURRENT MASS DOT CONSTRUCTION AND TRAFFIC STANDARD DETAILS.

	DEDHAM DPW **DESIGN & CONSTRUCTION STANDARDS** ALTERNATE TYPE CATCH BASIN NOTES	SCALE: NTS	DATE OF ISSUE: FEBRUARY 2011
		REVISED:	
		DETAIL NUMBER: SDSW.03B	

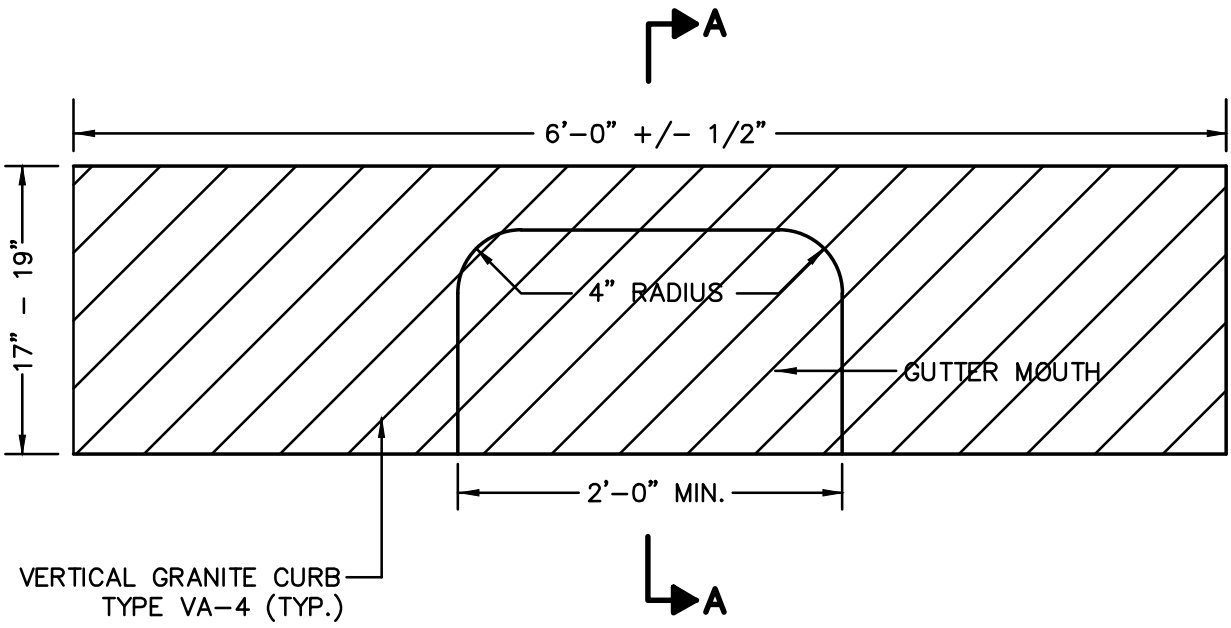

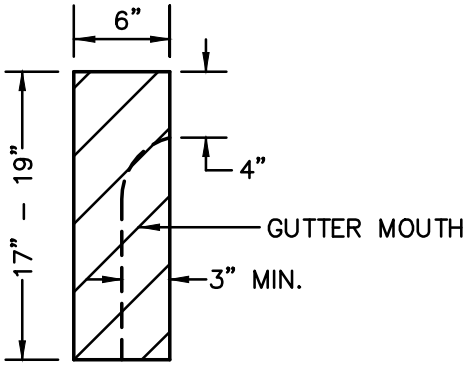

SECTION A-A

UNLESS OTHERWISE NOTED, CONSTRUCTION METHODS, MATERIAL REQUIREMENTS AND METHOD OF MEASUREMENT SHALL BE IN ACCORDANCE WITH THE LATEST EDITION OF THE MASSACHUSETTS DEPARTMENT OF TRANSPORTATION (MASS DOT) STANDARD SPECIFICATIONS.

ALSO REFERENCE CURRENT MASS DOT CONSTRUCTION AND TRAFFIC STANDARD DETAILS.

	DEDHAM DPW **DESIGN & CONSTRUCTION STANDARDS** GRANITE CURB INLET	SCALE: NTS	DATE OF ISSUE: FEBRUARY 2011
		REVISED:	
		DETAIL NUMBER: SDSW.04	

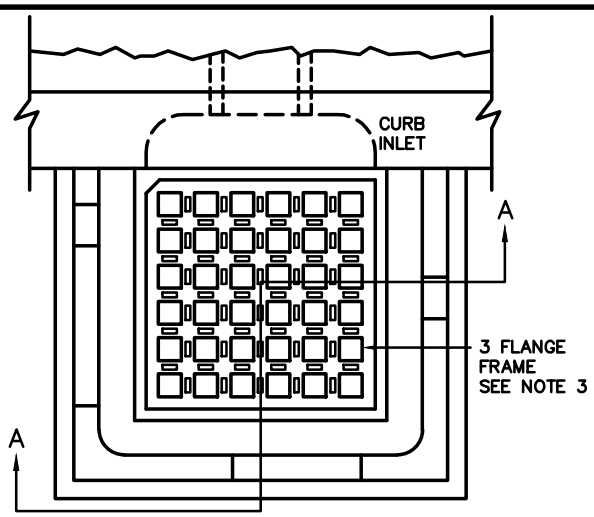

PLAN VIEW

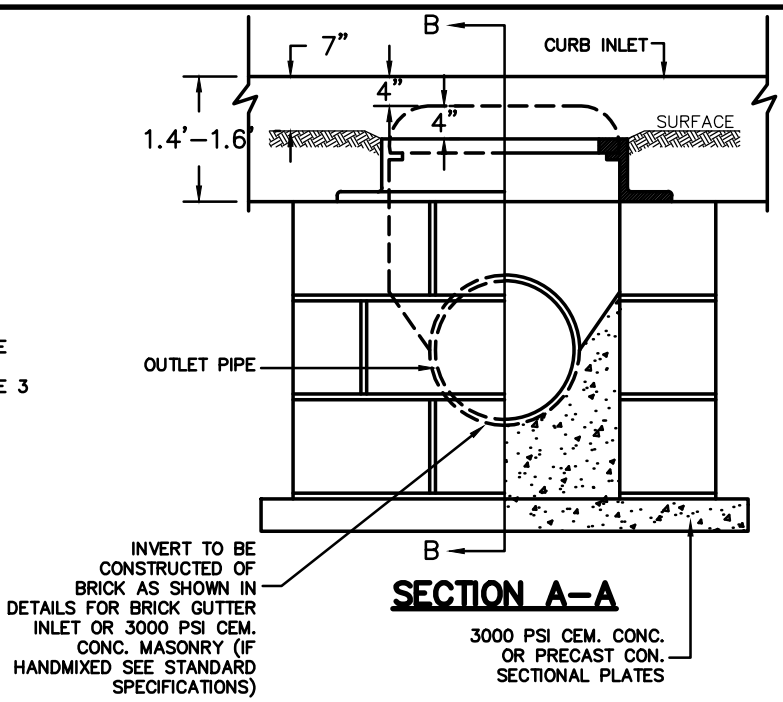

SECTION A–A

NOTES:

1. WHERE CURB INLET IS NOT USED THE INSIDE HORIZONTAL DIMENSIONS OF GUTTER INLET TO BE 2 FEET±1" X 2 FEET±1" IN WHICH CASE AND UNLESS OTHERWISE DIRECTED, A STANDARD 4–FLANGE FRAME IS TO BE USED.

2. BRICKS MAY BE USED BETWEEN TOP COURSE AND FRAME FOR GRADE ADJUSTMENT.

3. FRAME AND GRATE SHALL BE EAST JORDAN IRON WORKS CATALOG NOS. 5520M5 & 5523Z (3 FLANGE) OR EQUAL.

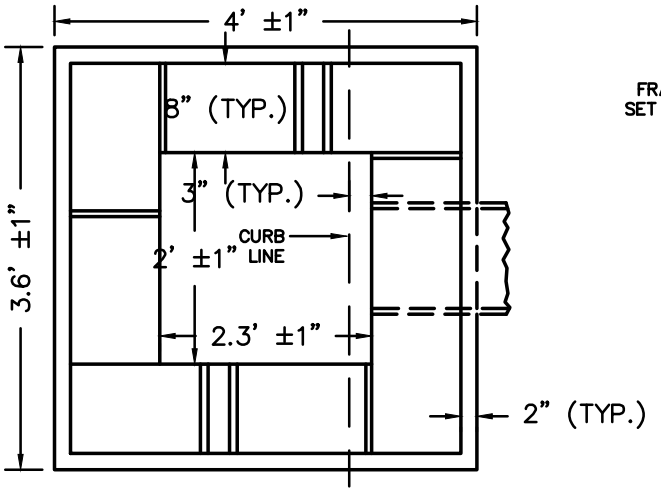

SECTION C–C

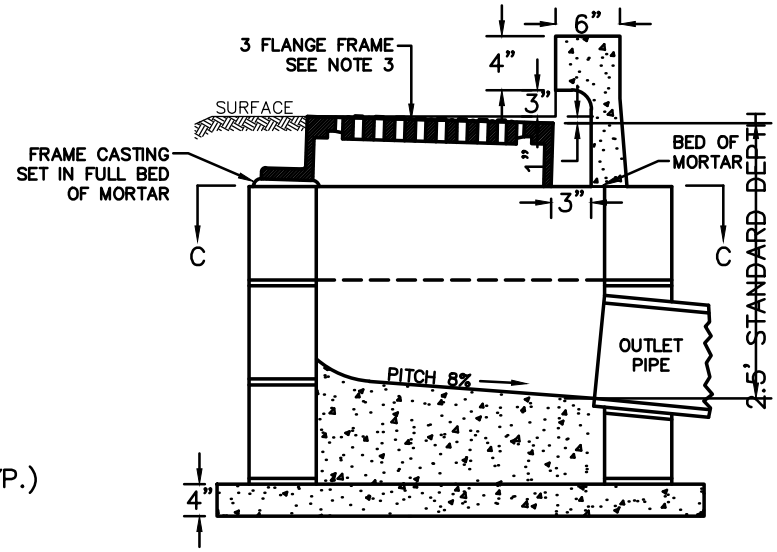

SECTION B–B

UNLESS OTHERWISE NOTED, CONSTRUCTION METHODS, MATERIAL REQUIREMENTS AND METHOD OF MEASUREMENT SHALL BE IN ACCORDANCE WITH THE LATEST EDITION OF THE MASSACHUSETTS DEPARTMENT OF TRANSPORTATION (MASS DOT) STANDARD SPECIFICATIONS.

ALSO REFERENCE CURRENT MASS DOT CONSTRUCTION AND TRAFFIC STANDARD DETAILS.

	DEDHAM DPW **DESIGN & CONSTRUCTION STANDARDS** CONCRETE BLOCK GUTTER INLET	SCALE: NTS	DATE OF ISSUE: FEBRUARY 2011
		REVISED:	
		DETAIL NUMBER: SDSW.05	

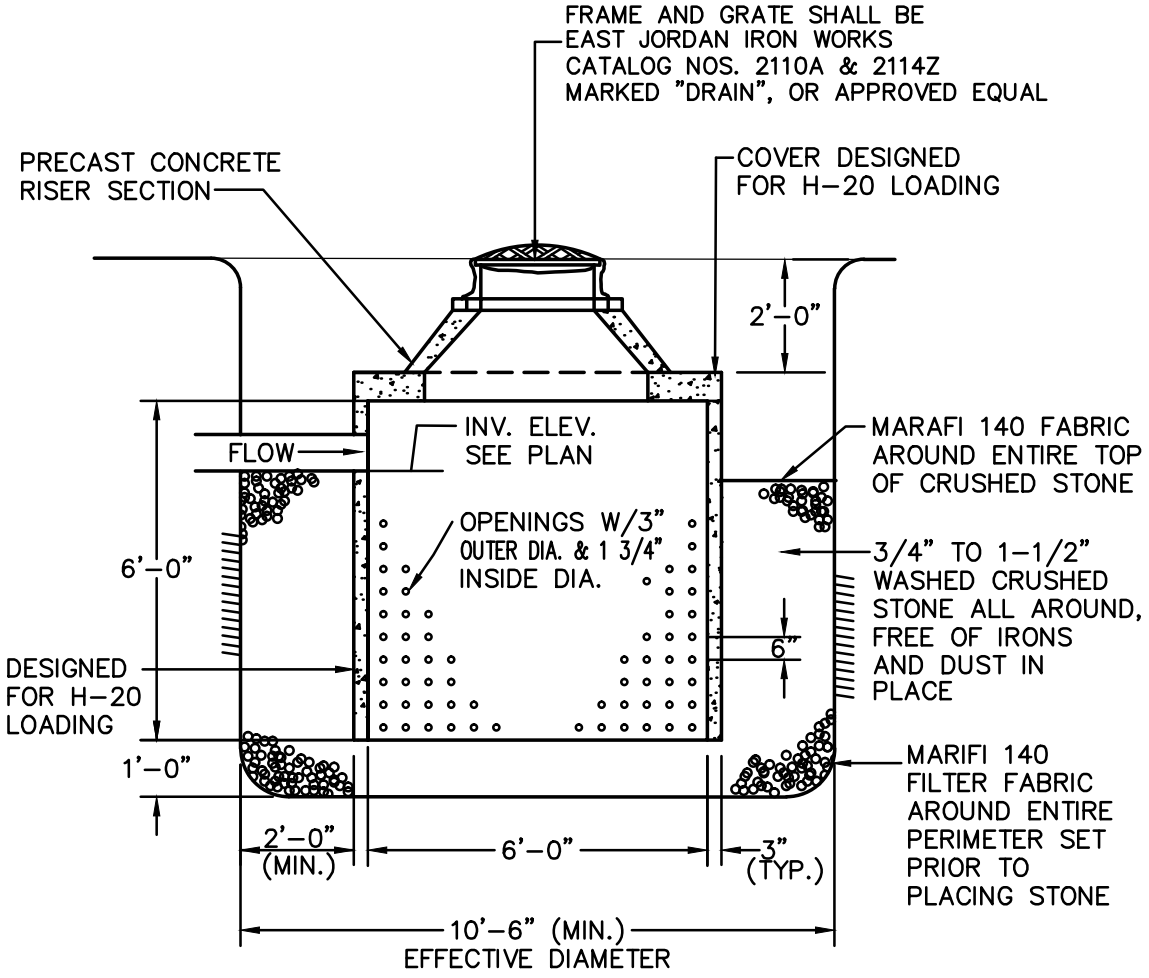

UNLESS OTHERWISE NOTED, CONSTRUCTION METHODS, MATERIAL REQUIREMENTS AND METHOD OF MEASUREMENT SHALL BE IN ACCORDANCE WITH THE LATEST EDITION OF THE MASSACHUSETTS DEPARTMENT OF TRANSPORTATION (MASS DOT) STANDARD SPECIFICATIONS.

ALSO REFERENCE CURRENT MASS DOT CONSTRUCTION AND TRAFFIC STANDARD DETAILS.

	DEDHAM DPW **DESIGN & CONSTRUCTION STANDARDS** LEACHING BASIN	SCALE: NTS	DATE OF ISSUE: FEBRUARY 2011
		REVISED:	
		DETAIL NUMBER: SDSW.06	

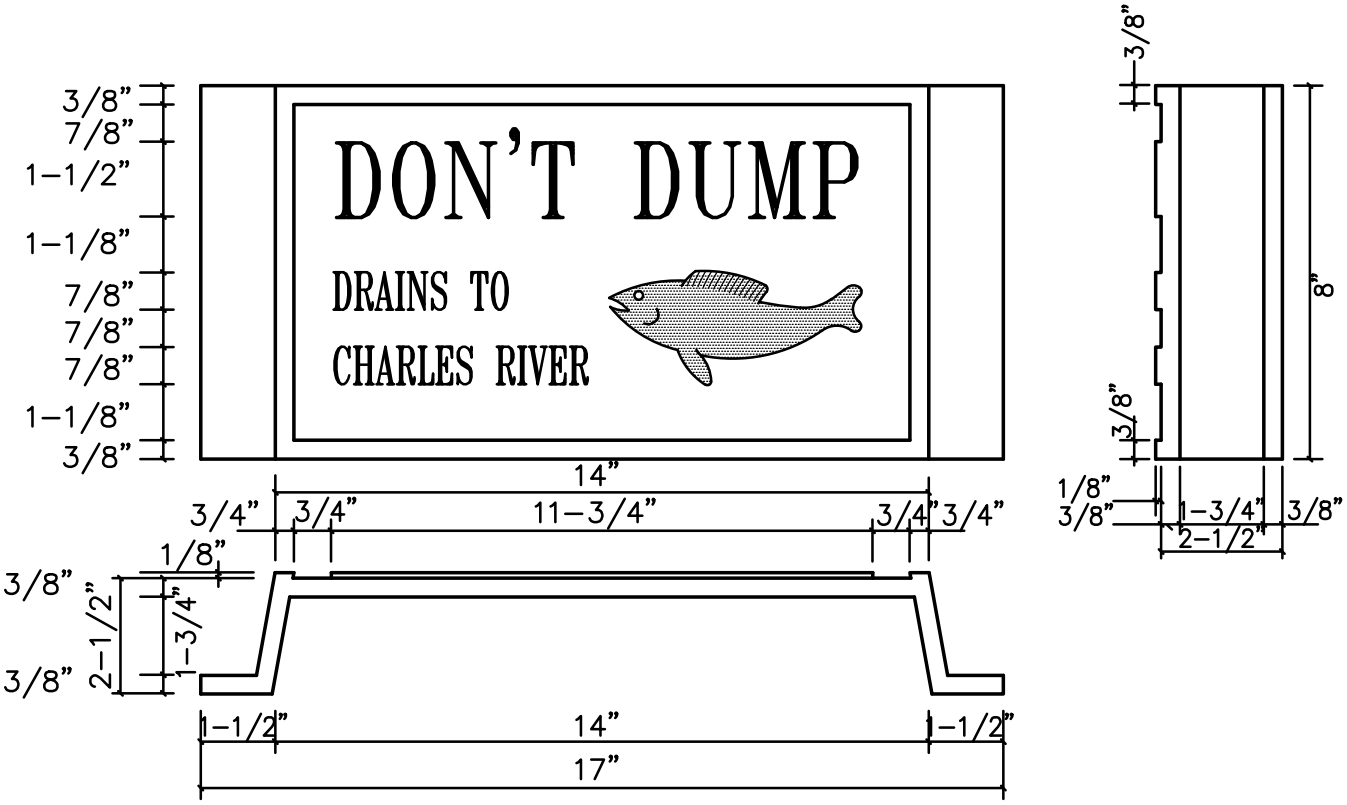

NOTES:

1. LETTERING SYMBOLS AND BORDER ALL CUT AT 1/8 HEIGHT.
2. THE SIZE OF THE FISH SHALL BE TO THE SCALE SHOWN ON THE DRAWING.
3. MINIMUM WEIGHT 18 LBS. PER CASTING.
4. CASTING TO BE MADE OF CAST IRON.

UNLESS OTHERWISE NOTED, CONSTRUCTION METHODS, MATERIAL REQUIREMENTS AND METHOD OF MEASUREMENT SHALL BE IN ACCORDANCE WITH THE LATEST EDITION OF THE MASSACHUSETTS DEPARTMENT OF TRANSPORTATION (MASS DOT) STANDARD SPECIFICATIONS.

ALSO REFERENCE CURRENT MASS DOT CONSTRUCTION AND TRAFFIC STANDARD DETAILS.

DEDHAM DPW
DESIGN & CONSTRUCTION STANDARDS

ENVIRONMENTAL CATCH BASIN PLACARD
DRAINS TO CHARLES RIVER

SCALE:	DATE OF ISSUE:
NTS	FEBRUARY 2011
REVISED:	
DETAIL NUMBER: SDSW.07	

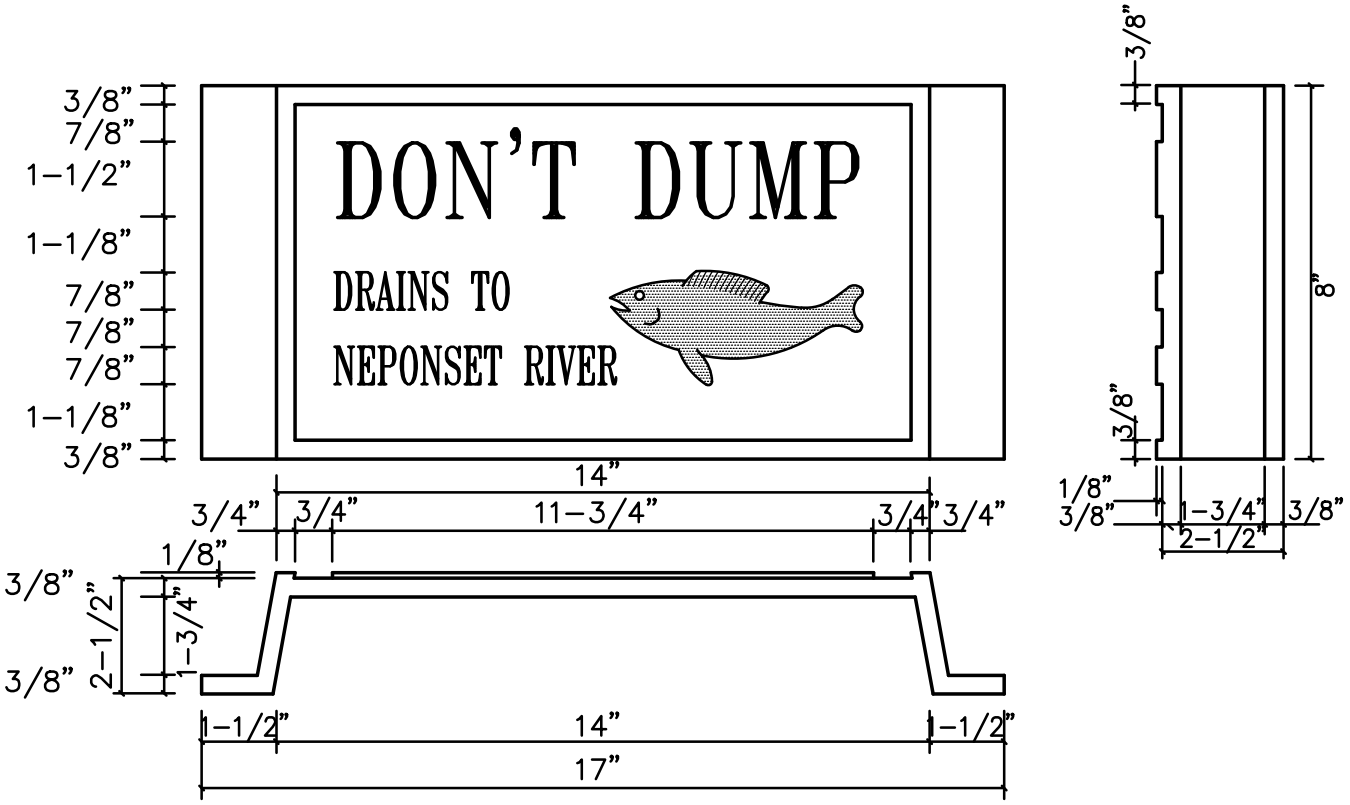

NOTES:

1. LETTERING SYMBOLS AND BORDER ALL CUT AT 1/8 HEIGHT.
2. THE SIZE OF THE FISH SHALL BE TO THE SCALE SHOWN ON THE DRAWING.
3. MINIMUM WEIGHT 18 LBS. PER CASTING.
4. CASTING TO BE MADE OF CAST IRON.

UNLESS OTHERWISE NOTED, CONSTRUCTION METHODS, MATERIAL REQUIREMENTS AND METHOD OF MEASUREMENT SHALL BE IN ACCORDANCE WITH THE LATEST EDITION OF THE MASSACHUSETTS DEPARTMENT OF TRANSPORTATION (MASS DOT) STANDARD SPECIFICATIONS.

ALSO REFERENCE CURRENT MASS DOT CONSTRUCTION AND TRAFFIC STANDARD DETAILS.

DEDHAM DPW
DESIGN & CONSTRUCTION STANDARDS

ENVIRONMENTAL CATCH BASIN PLACARD
DRAINS TO NEPONSET RIVER

SCALE:	DATE OF ISSUE:
NTS	FEBRUARY 2011
REVISED:	
DETAIL NUMBER: SDSW.08	

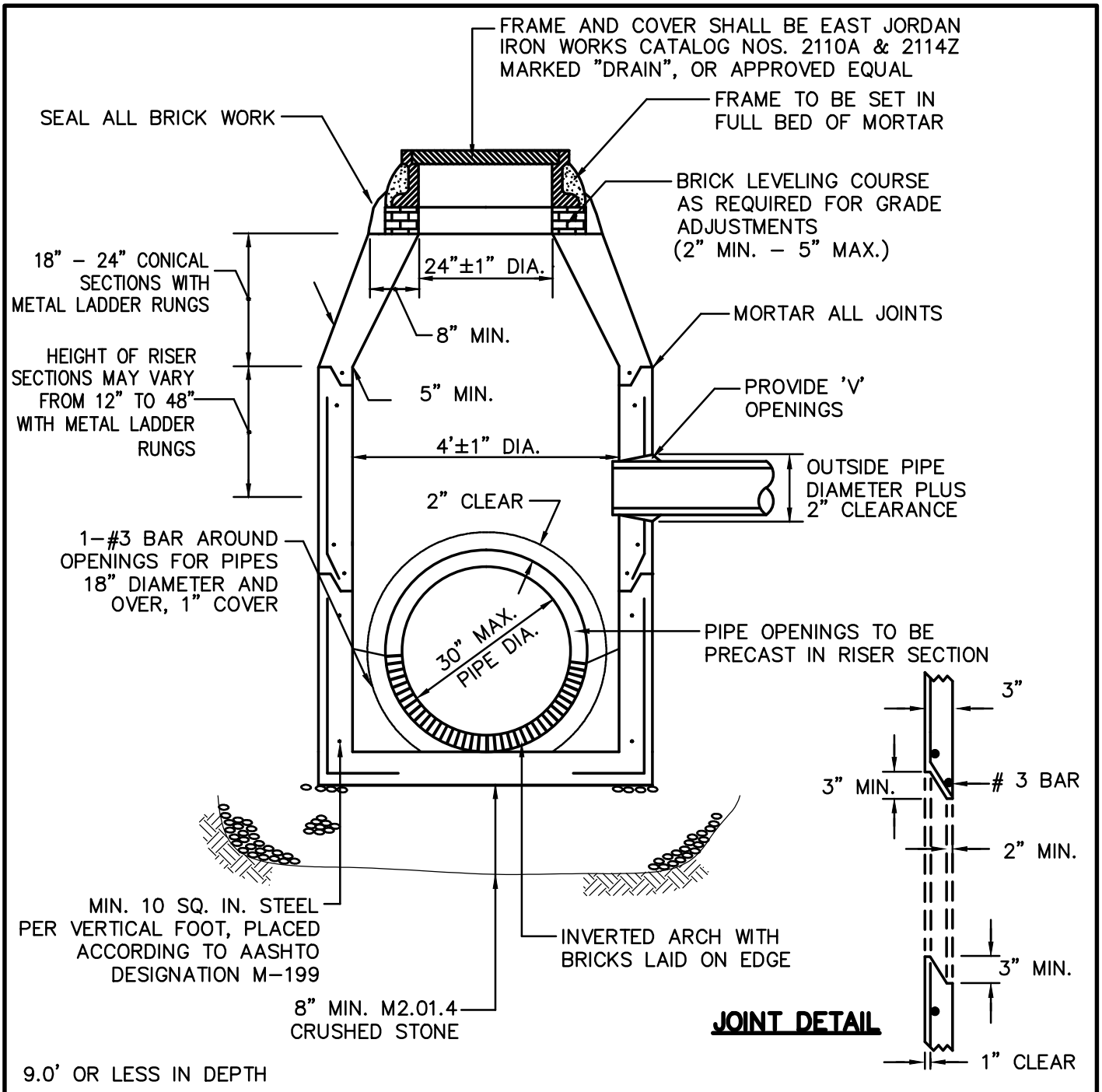

UNLESS OTHERWISE NOTED, CONSTRUCTION METHODS, MATERIAL REQUIREMENTS AND METHOD OF MEASUREMENT SHALL BE IN ACCORDANCE WITH THE LATEST EDITION OF THE MASSACHUSETTS DEPARTMENT OF TRANSPORTATION (MASS DOT) STANDARD SPECIFICATIONS.

ALSO REFERENCE CURRENT MASS DOT CONSTRUCTION AND TRAFFIC STANDARD DETAILS.

	DEDHAM DPW **DESIGN & CONSTRUCTION STANDARDS** PRECAST DRAIN MANHOLE	SCALE: NTS	DATE OF ISSUE: FEBRUARY 2011
		REVISED:	
		DETAIL NUMBER: SDSW.09	

D	E	G	H	J	L	N	P	F
30"	4'–0"	4'–0"	5'–6"	3'–6"	1'–6"	2'–0"	5'–3"	4'–3"
36"	4'–6"	4'–3"	6'–0"	4'–0"	1'–8"	2'–3"	5'–11"	5'–0"
42"	5'–0"	4'–6"	6'–6"	4'–6"	1'–10"	2'–6"	6'–6"	5'–9"
48"	5'–6"	4'–9"	7'–0"	5'–0"	2'–0"	2'–9"	7'–2"	6'–6"

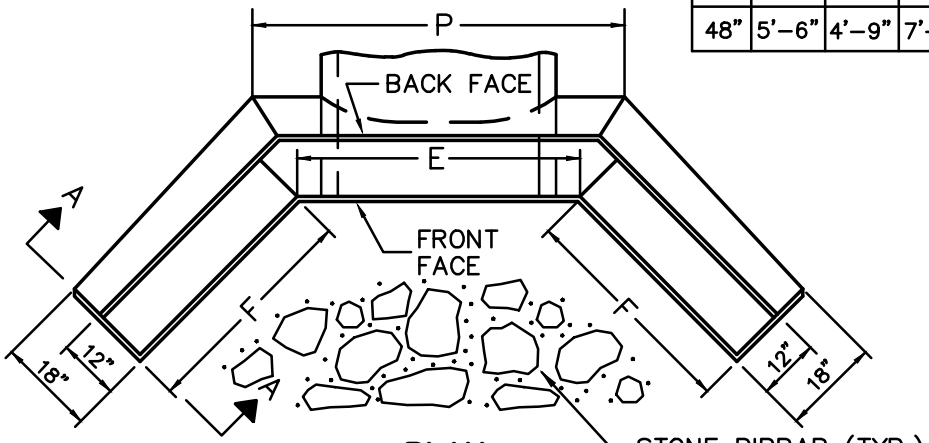

PLAN

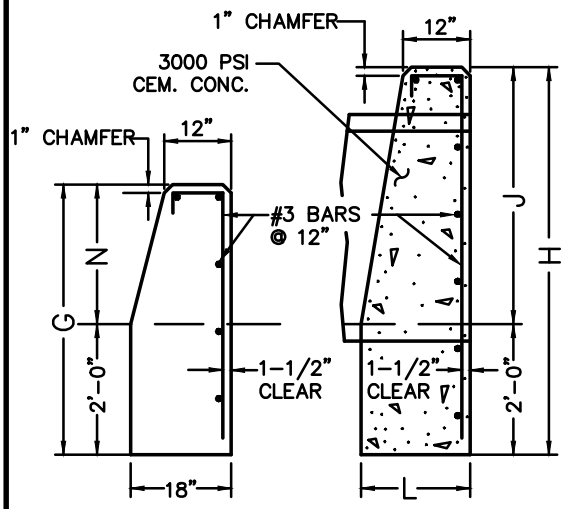

ELEV. A–A

SECTION B–B

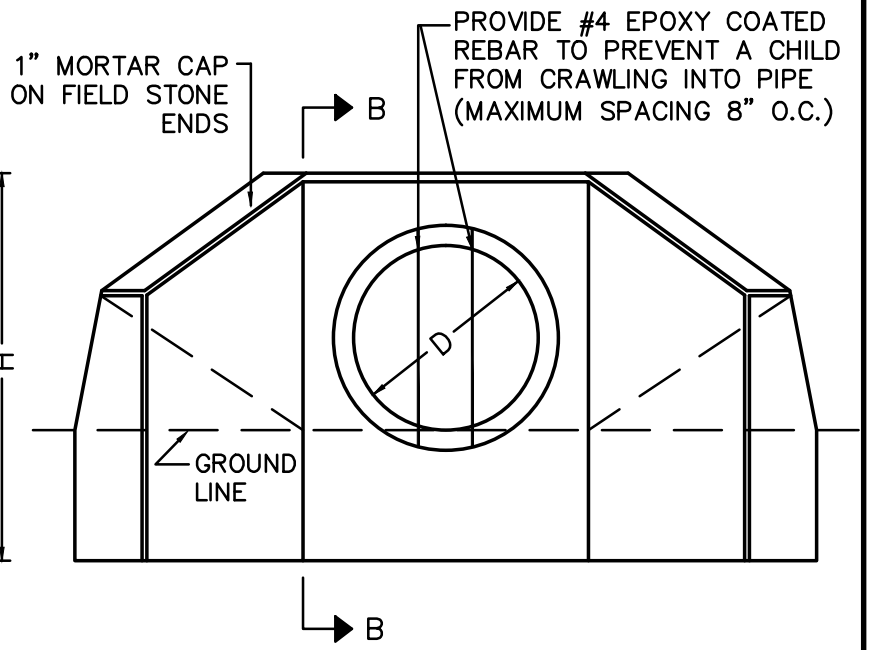

FRONT ELEVATION

UNLESS OTHERWISE NOTED, CONSTRUCTION METHODS, MATERIAL REQUIREMENTS AND METHOD OF MEASUREMENT SHALL BE IN ACCORDANCE WITH THE LATEST EDITION OF THE MASSACHUSETTS DEPARTMENT OF TRANSPORTATION (MASS DOT) STANDARD SPECIFICATIONS.

ALSO REFERENCE CURRENT MASS DOT CONSTRUCTION AND TRAFFIC STANDARD DETAILS.

DEDHAM DPW
DESIGN & CONSTRUCTION STANDARDS

CONCRETE OR FIELD STONE MASONRY ENDS

SCALE:	DATE OF ISSUE:
NTS	FEBRUARY 2011
REVISED:	
DETAIL NUMBER: SDSW.10	

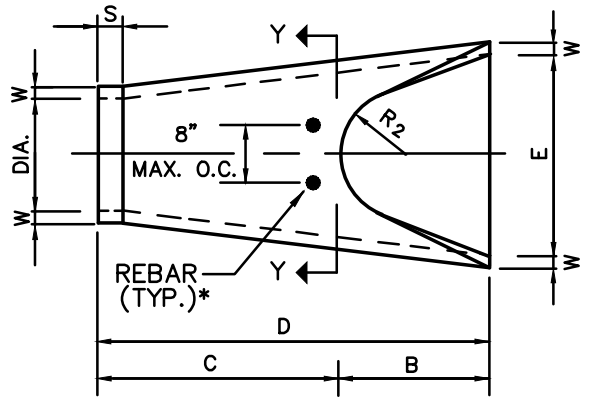

PLAN

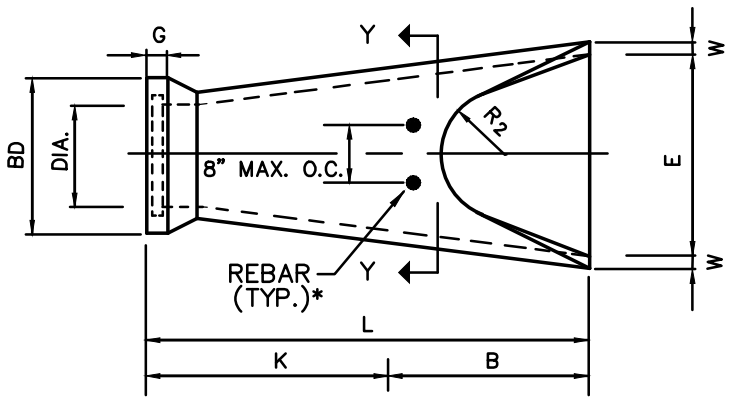

PLAN

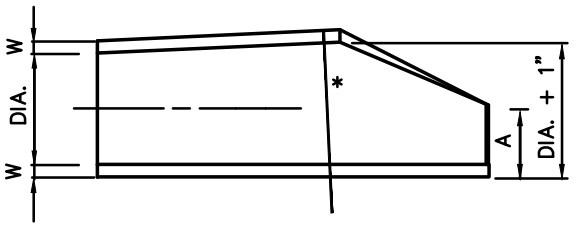

SECTION

INLET END

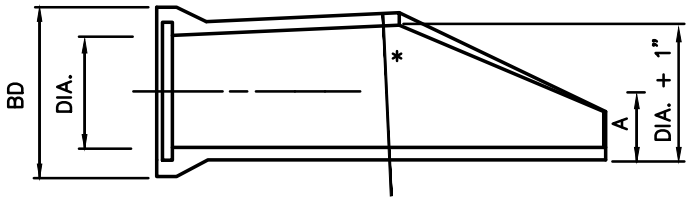

SECTION

OUTLET END

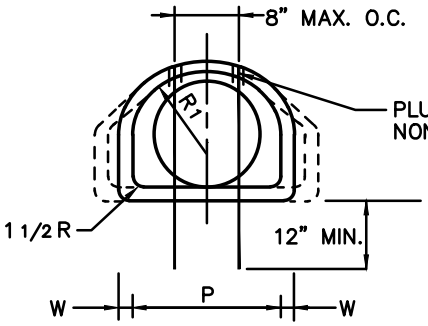

SECTION Y–Y

NOTE:
SEE OUTLET EROSION PROTECTION DETAIL FOR INSTALLATION OF RIPRAP AT FLARED END SECTION.

DIA.	W	A	B	C	D	E	BD	K	L	P	DIA. +1"	R_1	R_2	S	G	SLOPE
12"	2"	4"	2'–0"	4'–0 7/8"	6'–1 3/8"	2'–0"	20"	4'–6 1/8"	6'–6 1/8"	19 15/16"	13"	10 1/8"	9"	4"	2 1/2"	3:1
15"	2 1/4"	6"	2'–3"	3'–10"	6'–1 1/2"	2'–6"	24"	4'–3 11/16"	6'–6 11/16"	24 5/16"	16"	12 1/2"	11"	4"	2 1/2"	3:1
18"	2 1/2"	9"	2'–3"	3'–10"	6'–1"	3'–0"	28"	4'–3 7/8"	6'–6 7/8"	29"	19"	15 1/2"	12"	4"	2 3/4"	3:1
24"	3"	9 1/2"	3'–7 1/2"	2'–6"	6'–1"	4'–0"	36"	3'–0 1/2"	6'–8"	33 3/16"	25"	16 13/16"	14"	4"	3"	3:1

* PROVIDE #4 EPOXY COATED REBAR TO PREVENT A CHILD FROM CRAWLING INTO PIPE (MAXIMUM SPACING 8" O.C.)

UNLESS OTHERWISE NOTED, CONSTRUCTION METHODS, MATERIAL REQUIREMENTS AND METHOD OF MEASUREMENT SHALL BE IN ACCORDANCE WITH THE LATEST EDITION OF THE MASSACHUSETTS DEPARTMENT OF TRANSPORTATION (MASS DOT) STANDARD SPECIFICATIONS.

ALSO REFERENCE CURRENT MASS DOT CONSTRUCTION AND TRAFFIC STANDARD DETAILS.

DEDHAM DPW
DESIGN & CONSTRUCTION STANDARDS

FLARED END SECTION

SCALE:	DATE OF ISSUE:
NTS	FEBRUARY 2011
REVISED:	
DETAIL NUMBER:	SDSW.11

PLAN VIEW

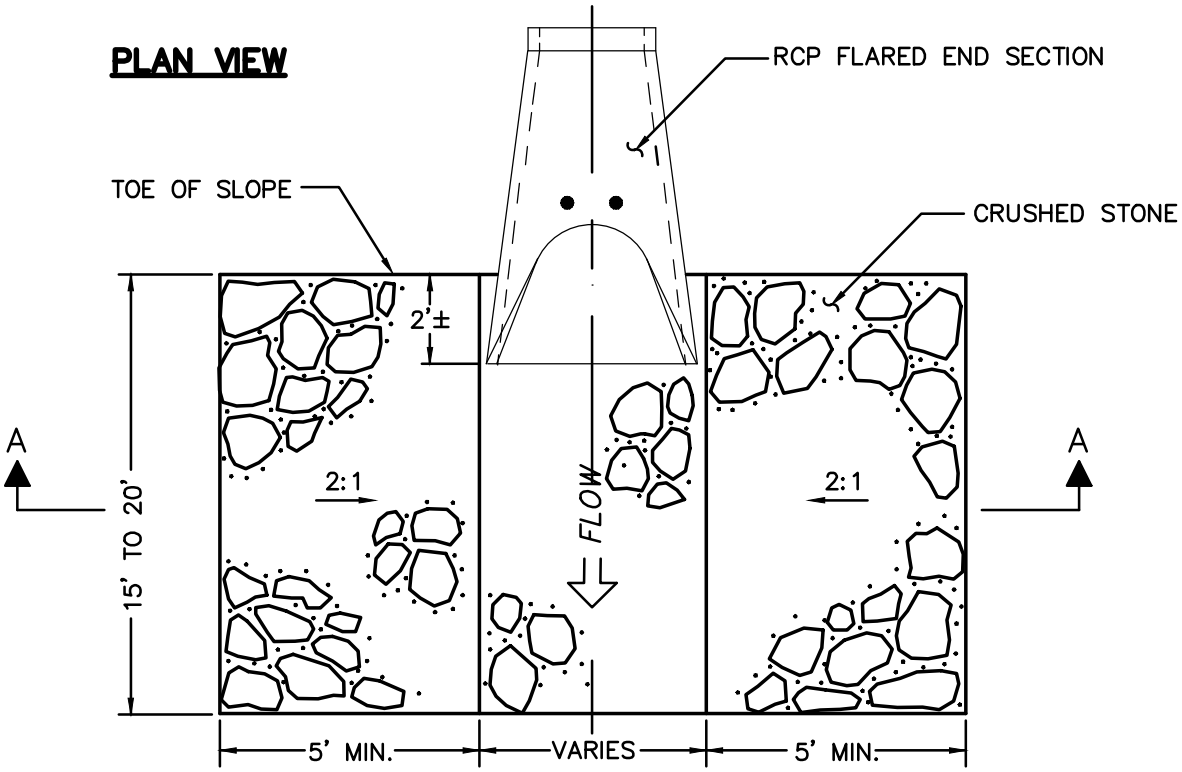

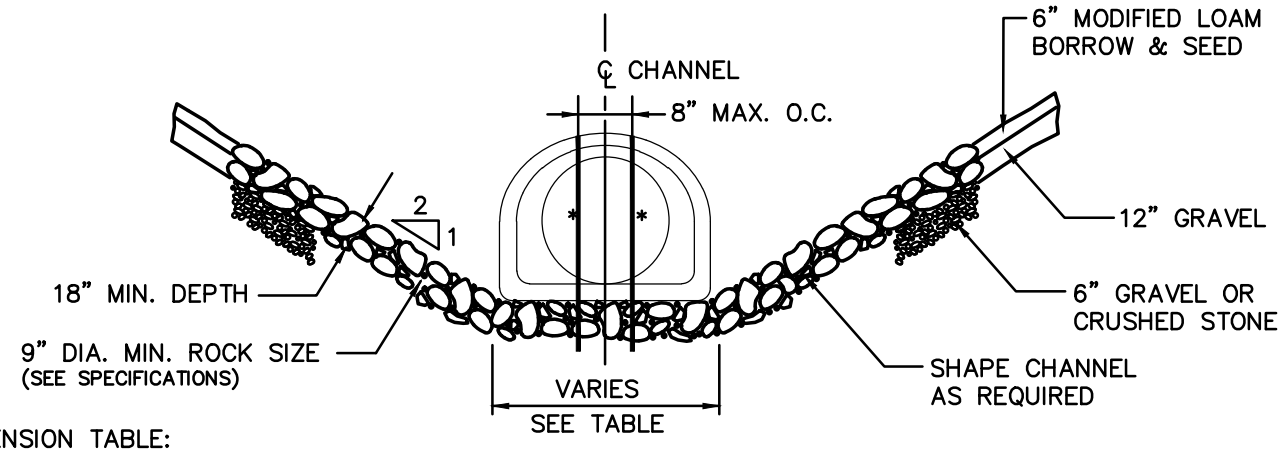

DIMENSION TABLE:

PIPE DIA.	CHANNEL WIDTH
12"	2'–6"
15"	3'–0"
18"	3'–7"
24"	4'–8"

SECTION A–A

* PROVIDE #4 EPOXY COATED REBAR TO PREVENT A CHILD FROM CRAWLING INTO PIPE (MAXIMUM SPACING 8" O.C.)

UNLESS OTHERWISE NOTED, CONSTRUCTION METHODS, MATERIAL REQUIREMENTS AND METHOD OF MEASUREMENT SHALL BE IN ACCORDANCE WITH THE LATEST EDITION OF THE MASSACHUSETTS DEPARTMENT OF TRANSPORTATION (MASS DOT) STANDARD SPECIFICATIONS.

ALSO REFERENCE CURRENT MASS DOT CONSTRUCTION AND TRAFFIC STANDARD DETAILS.

DEDHAM DPW
DESIGN & CONSTRUCTION STANDARDS

OUTLET EROSION PROTECTION

SCALE:	DATE OF ISSUE:
NTS	FEBRUARY 2011
REVISED:	
DETAIL NUMBER: SDSW.12	

PLAN VIEW

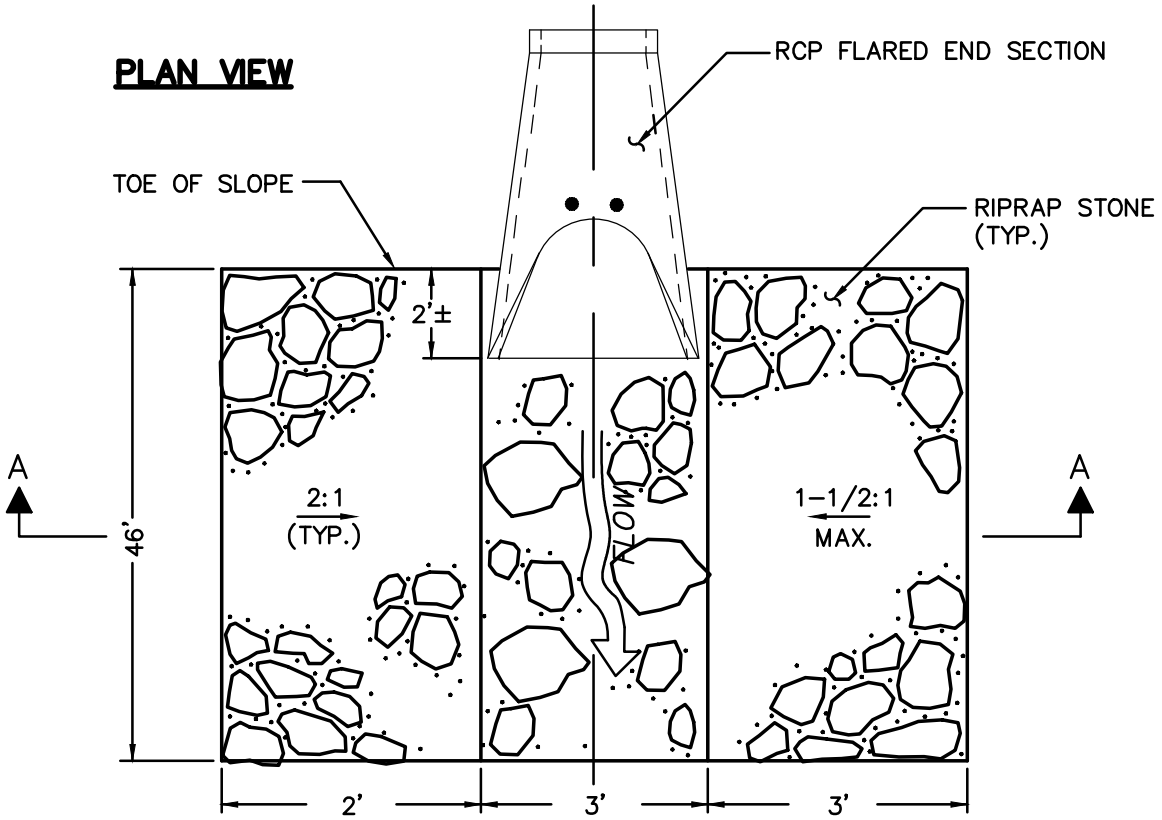

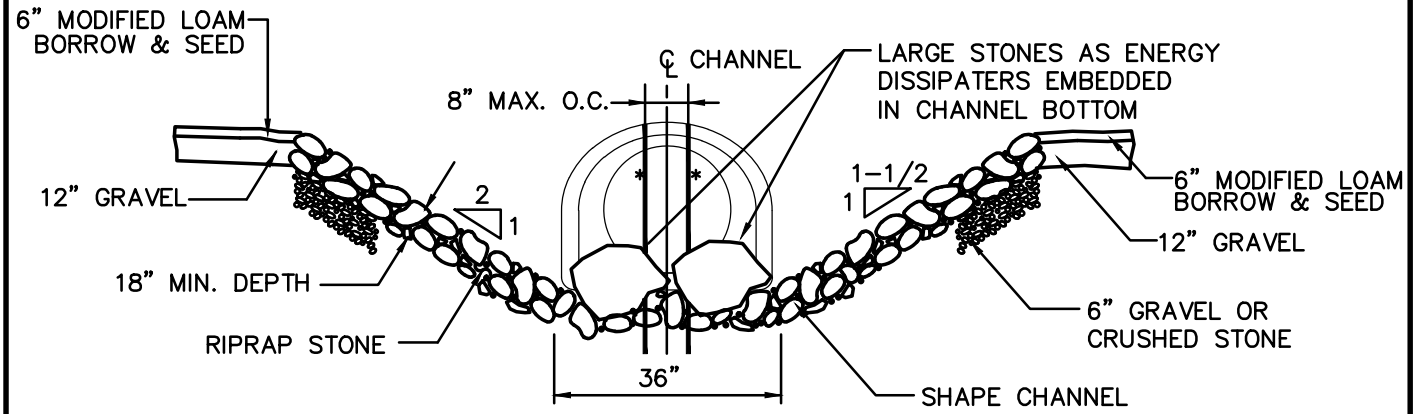

SECTION A–A

* PROVIDE #4 EPOXY COATED REBAR TO PREVENT A CHILD FROM CRAWLING INTO PIPE (MAXIMUM SPACING 8" O.C.)

UNLESS OTHERWISE NOTED, CONSTRUCTION METHODS, MATERIAL REQUIREMENTS AND METHOD OF MEASUREMENT SHALL BE IN ACCORDANCE WITH THE LATEST EDITION OF THE MASSACHUSETTS DEPARTMENT OF TRANSPORTATION (MASS DOT) STANDARD SPECIFICATIONS.

ALSO REFERENCE CURRENT MASS DOT CONSTRUCTION AND TRAFFIC STANDARD DETAILS.

DEDHAM DPW
DESIGN & CONSTRUCTION STANDARDS

RIPRAP VELOCITY DISSIPATER

SCALE:	DATE OF ISSUE:
NTS	FEBRUARY 2011
REVISED:	
DETAIL NUMBER: SDSW.13	

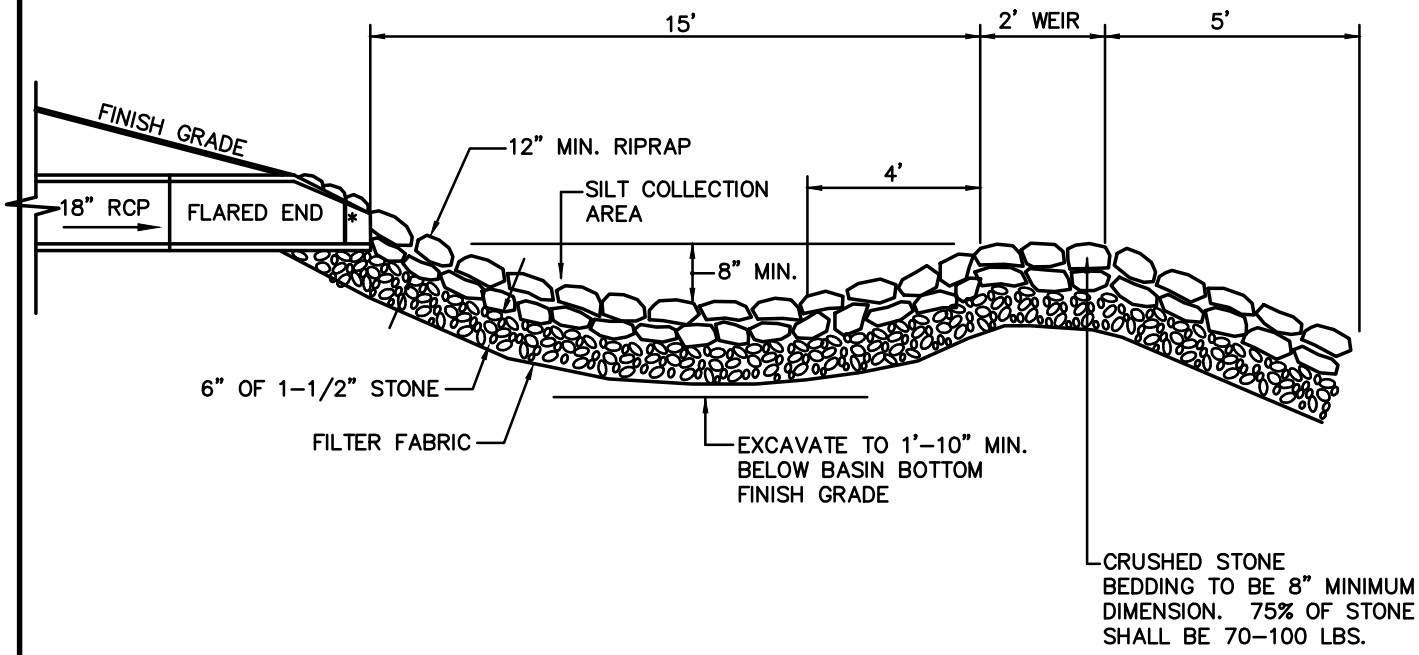

* PROVIDE #4 EPOXY COATED REBAR TO PREVENT A CHILD FROM CRAWLING INTO PIPE (MAXIMUM SPACING 8" O.C.)

UNLESS OTHERWISE NOTED, CONSTRUCTION METHODS, MATERIAL REQUIREMENTS AND METHOD OF MEASUREMENT SHALL BE IN ACCORDANCE WITH THE LATEST EDITION OF THE MASSACHUSETTS DEPARTMENT OF TRANSPORTATION (MASS DOT) STANDARD SPECIFICATIONS.

ALSO REFERENCE CURRENT MASS DOT CONSTRUCTION AND TRAFFIC STANDARD DETAILS.

DEDHAM DPW
DESIGN & CONSTRUCTION STANDARDS

STONE PROTECTION OUTLET

SCALE:	DATE OF ISSUE:
NTS	FEBRUARY 2011
REVISED:	
DETAIL NUMBER: SDSW.14	

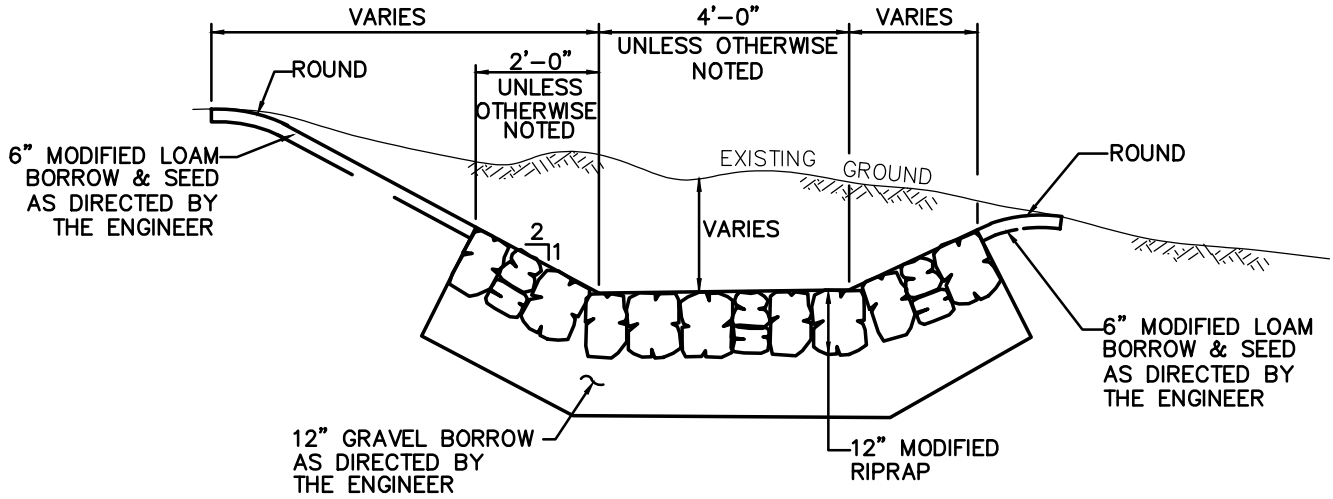

UNLESS OTHERWISE NOTED, CONSTRUCTION METHODS, MATERIAL REQUIREMENTS AND METHOD OF MEASUREMENT SHALL BE IN ACCORDANCE WITH THE LATEST EDITION OF THE MASSACHUSETTS DEPARTMENT OF TRANSPORTATION (MASS DOT) STANDARD SPECIFICATIONS.

ALSO REFERENCE CURRENT MASS DOT CONSTRUCTION AND TRAFFIC STANDARD DETAILS.

DEDHAM DPW
DESIGN & CONSTRUCTION STANDARDS

RIPRAP DITCH

SCALE:	DATE OF ISSUE:
NTS	FEBRUARY 2011
REVISED:	
DETAIL NUMBER: SDSW.15	

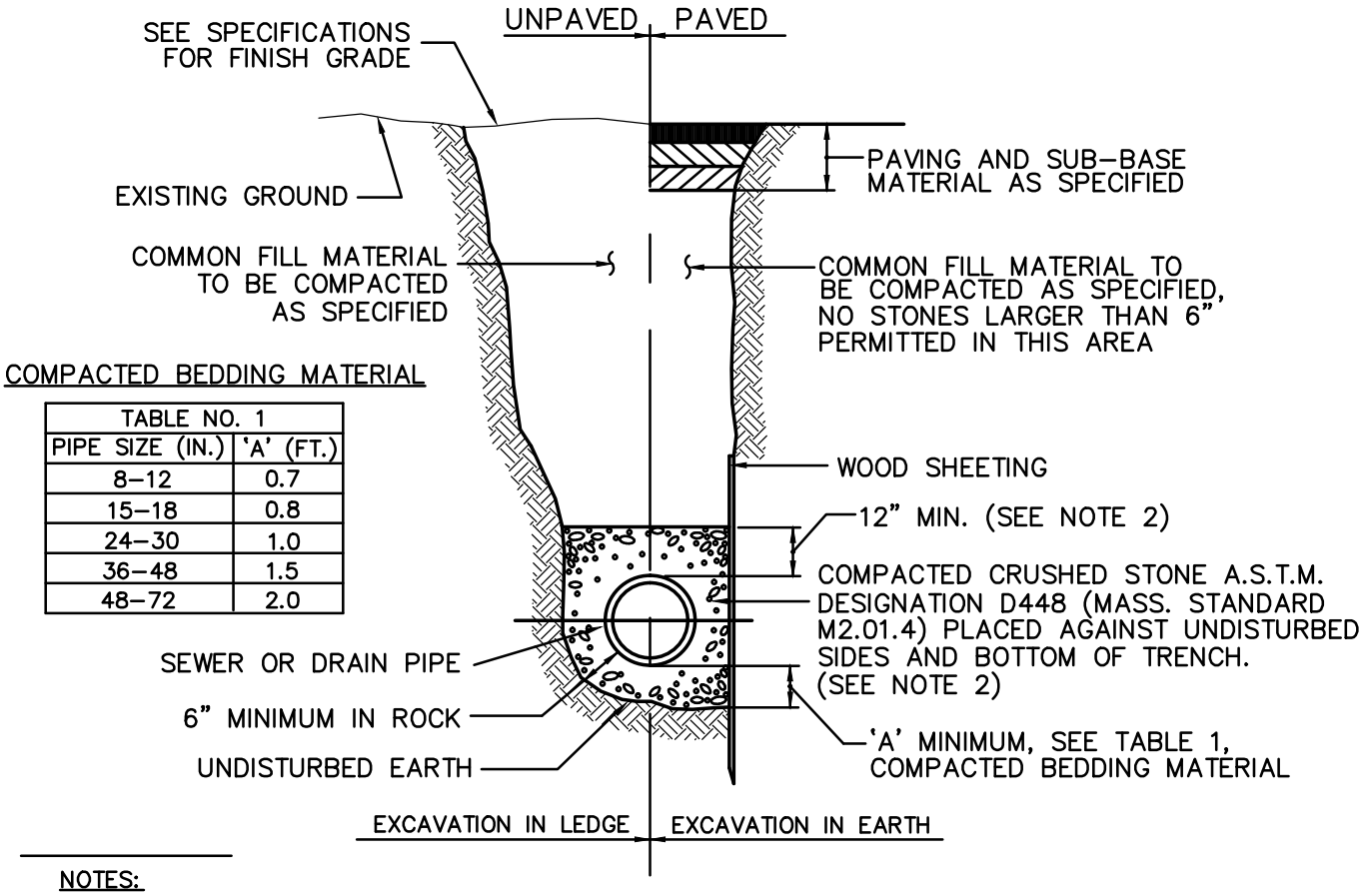

COMPACTED BEDDING MATERIAL

TABLE NO. 1	
PIPE SIZE (IN.)	'A' (FT.)
8–12	0.7
15–18	0.8
24–30	1.0
36–48	1.5
48–72	2.0

NOTES:

1. SHEETING, WHEN REQUIRED, TO BE CUT OFF AT LEAST 5 FEET BELOW STREET AND A MINIMUM OF 1 FOOT ABOVE TOP OF PIPE. WOOD SHEETING DRIVEN BELOW MID–DIAMETER OF THE PIPE SHALL BE LEFT IN PLACE. STEEL SHEETING DRIVEN BELOW MID–DIAMETER MAY BE WITHDRAWN IF APPROVED IN WRITING BY THE ENGINEER. FOR PVC PIPE ALL SHEETING DRIVEN BELOW MID–DIAMETER SHALL BE LEFT IN PLACE.
2. WHEN APPROVED BY THE ENGINEER FOR PIPES OTHER THAN PVC, SELECTED GRAVEL FILL MATERIAL MAY BE USED FROM MID–DIAMETER OF PIPE TO 12" ABOVE TOP OF PIPE. NO STONES LARGER THAN 2 INCHES IN ANY DIMENSION WILL BE PERMITTED IN THIS AREA – MASSACHUSETTS DPW MATERIAL STANDARD M1.03.0 TYPE C.
3. TRENCHES LOCATED ON THE ROAD SHOULDER SHALL BE TREATED THE SAME AS OFF–ROAD EXCEPT FOR PAVING. (SEE TRENCH RESTORATION DETAILS SDSW.18–20).
4. PROVIDE AT LEAST ONE IMPERVIOUS DAM IN GRAVEL BEDDING BETWEEN EACH MANHOLE WHERE DIRECTED, OR EVERY 300 FEET, WHICHEVER IS LESS. SEE DETAIL.
5. BEDDING MATERIAL FOR PVC PIPE SHALL MEET THE REQUIREMENTS OF ASTM D2321 CLASS I OR CLASS II EMBEDMENT MATERIALS.

UNLESS OTHERWISE NOTED, CONSTRUCTION METHODS, MATERIAL REQUIREMENTS AND METHOD OF MEASUREMENT SHALL BE IN ACCORDANCE WITH THE LATEST EDITION OF THE MASSACHUSETTS DEPARTMENT OF TRANSPORTATION (MASS DOT) STANDARD SPECIFICATIONS.

ALSO REFERENCE CURRENT MASS DOT CONSTRUCTION AND TRAFFIC STANDARD DETAILS.

DEDHAM DPW
DESIGN & CONSTRUCTION STANDARDS

DRAINAGE TRENCH
PVC, CPP OR RCP

SCALE:	DATE OF ISSUE:
NTS	FEBRUARY 2011
REVISED:	
DETAIL NUMBER: SDSW.16	

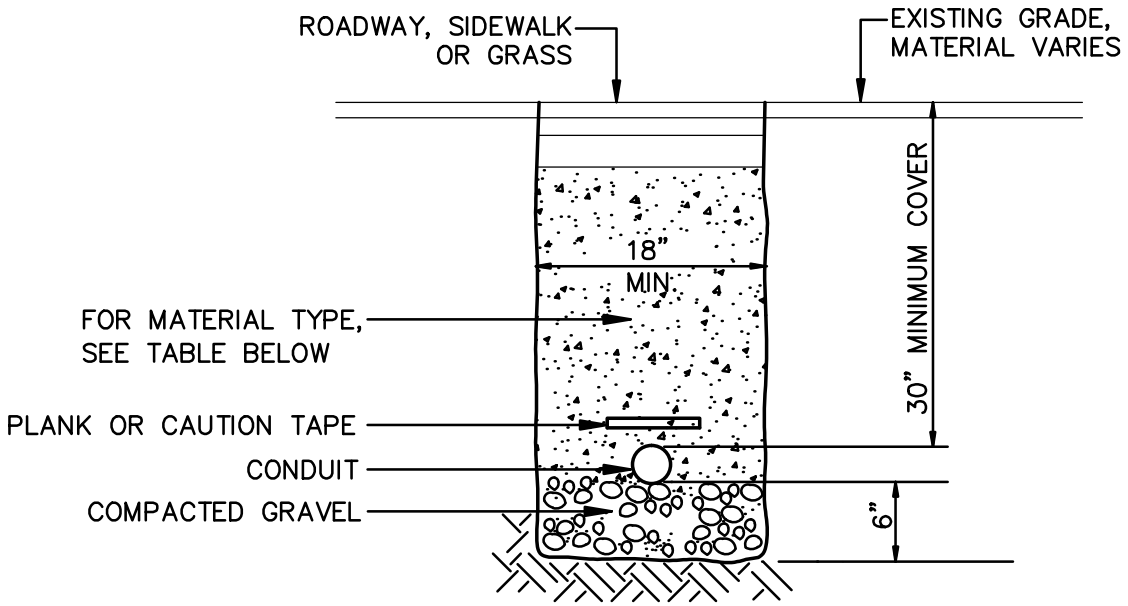

MATERIAL TYPE		
UNDER ROADWAY	UNDER SIDEWALK	UNDER GRASS
CONTROLLED DENSITY FILL (SEE SPECIAL PROVISIONS)	COMPACTED GRAVEL BORROW (TYPE "B")	COMPACTED GRAVEL BORROW (TYPE "B")

NOTE:
FLOWABLE MIX TRENCH REQUIRED ONLY IN AREAS OF EXISTING ROADWAY PAVEMENT THAT DO NOT REQUIRE FULL DEPTH CONSTRUCTION

UNLESS OTHERWISE NOTED, CONSTRUCTION METHODS, MATERIAL REQUIREMENTS AND METHOD OF MEASUREMENT SHALL BE IN ACCORDANCE WITH THE LATEST EDITION OF THE MASSACHUSETTS DEPARTMENT OF TRANSPORTATION (MASS DOT) STANDARD SPECIFICATIONS.

ALSO REFERENCE CURRENT MASS DOT CONSTRUCTION AND TRAFFIC STANDARD DETAILS.

DEDHAM DPW
DESIGN & CONSTRUCTION STANDARDS

TRAFFIC SIGNAL CONDUIT TRENCH

SCALE:	DATE OF ISSUE:
NTS	FEBRUARY 2011
REVISED:	
DETAIL NUMBER: SDSW.17	

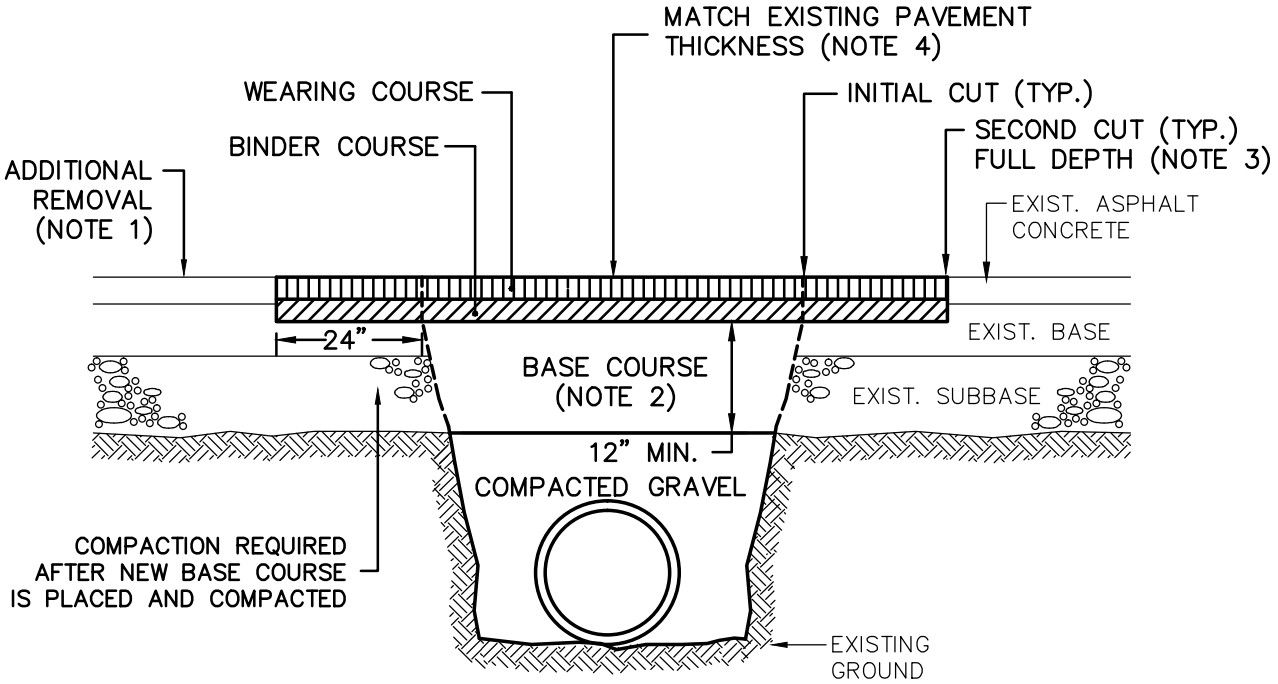

NOTES:

1. ADDITIONAL PAVEMENT REMOVAL – REMOVE ADDITIONAL PAVEMENT TO A PAINTED LANE STRIPE, A LIP OF GUTTER, A CURB, AN EXISTING PAVEMENT PATCH, OR AN EDGE OF THE PAVEMENT IF SUCH STREET FEATURE IS WITHIN 2' OF THE SECOND SAW CUT.

2. NEW BASE COURSE – PROVIDE BASE COURSE MATERIAL IN LIFTS NOT EXCEEDING 6" AFTER COMPACTION. COMPACT TO A MODIFIED PROCTOR DENSITY OF 95% OR GREATER.

3. TACK COAT – PROVIDE FULL TACK COAT COVERAGE ON ALL VERTICAL SURFACES.

4. NEW ASPHALT PAVEMENT – INSTALL 2" WEARING COURSE OVER 2" BINDER COURSE. COMPACT THE NEW PAVEMENT TO 96% OF LABORATORY DENSITY OR 94% OF MAXIMUM THEORETICAL DENSITY.

UNLESS OTHERWISE NOTED, CONSTRUCTION METHODS, MATERIAL REQUIREMENTS AND METHOD OF MEASUREMENT SHALL BE IN ACCORDANCE WITH THE LATEST EDITION OF THE MASSACHUSETTS DEPARTMENT OF TRANSPORTATION (MASS DOT) STANDARD SPECIFICATIONS.

ALSO REFERENCE CURRENT MASS DOT CONSTRUCTION AND TRAFFIC STANDARD DETAILS.

DEDHAM DPW
DESIGN & CONSTRUCTION STANDARDS

SHALLOW EXCAVATION IN ASPHALT PAVEMENT
42" DEPTH OR LESS

SCALE:	DATE OF ISSUE:
NTS	FEBRUARY 2011
REVISED:	
DETAIL NUMBER:	SDSW.18

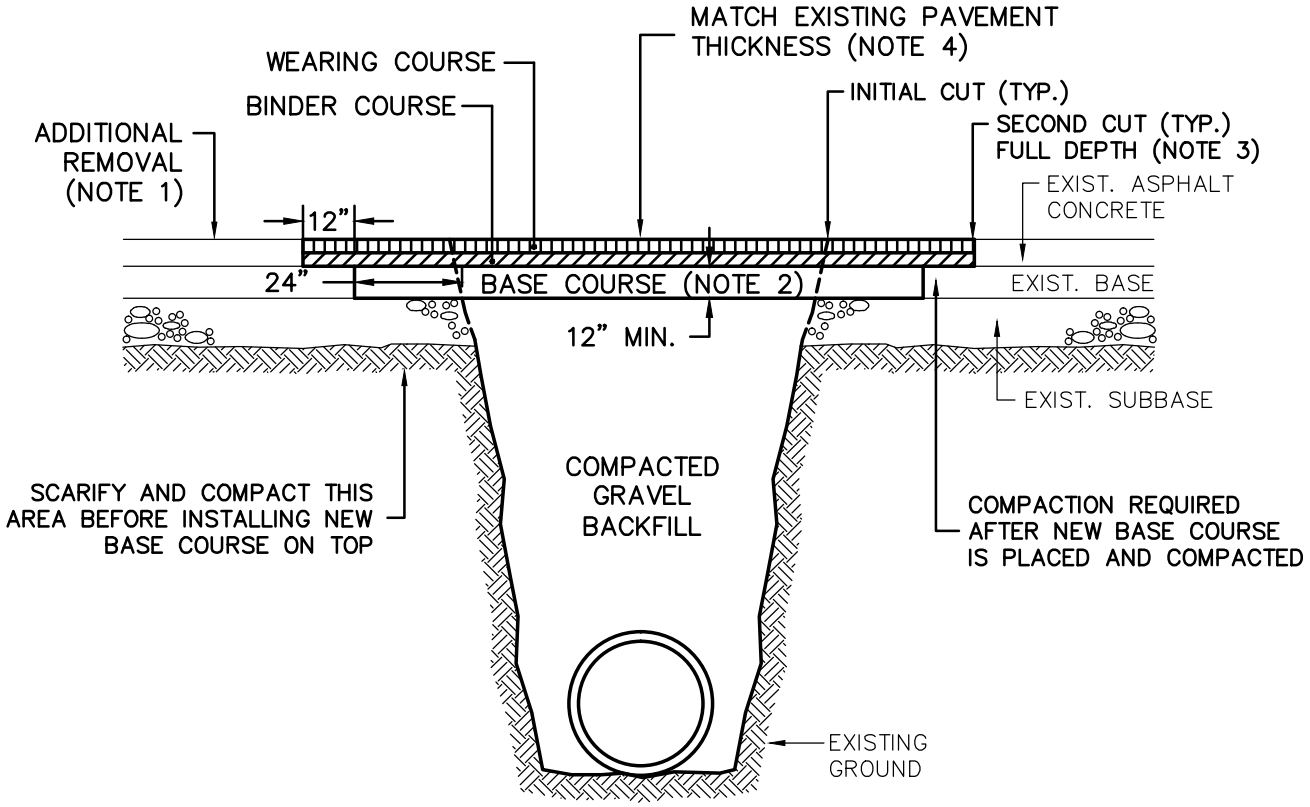

NOTES:

1. ADDITIONAL PAVEMENT REMOVAL – REMOVE ADDITIONAL PAVEMENT TO A PAINTED LANE STRIPE, A LIP OF GUTTER, A CURB, AN EXISTING PAVEMENT PATCH, OR AN EDGE OF THE PAVEMENT IF SUCH STREET FEATURE IS WITHIN 2' OF THE SECOND SAW CUT.

2. NEW BASE COURSE – PROVIDE BASE COURSE MATERIAL IN LIFTS NOT EXCEEDING 6" AFTER COMPACTION. COMPACT TO A MODIFIED PROCTOR DENSITY OF 95% OR GREATER.

3. TACK COAT – PROVIDE FULL TACK COAT COVERAGE ON ALL VERTICAL SURFACES.

4. NEW ASPHALT PAVEMENT – INSTALL 2" WEARING COURSE OVER 2" BINDER COURSE. COMPACT THE NEW PAVEMENT TO 96% OF LABORATORY DENSITY OR 94% OF MAXIMUM THEORETICAL DENSITY.

UNLESS OTHERWISE NOTED, CONSTRUCTION METHODS, MATERIAL REQUIREMENTS AND METHOD OF MEASUREMENT SHALL BE IN ACCORDANCE WITH THE LATEST EDITION OF THE MASSACHUSETTS DEPARTMENT OF TRANSPORTATION (MASS DOT) STANDARD SPECIFICATIONS.

ALSO REFERENCE CURRENT MASS DOT CONSTRUCTION AND TRAFFIC STANDARD DETAILS.

DEDHAM DPW
DESIGN & CONSTRUCTION STANDARDS

DEEP EXCAVATION IN ASPHALT PAVEMENT GREATER THAN 42" IN DEPTH

SCALE:	DATE OF ISSUE:
NTS	FEBRUARY 2011
REVISED:	
DETAIL NUMBER:	SDSW.19

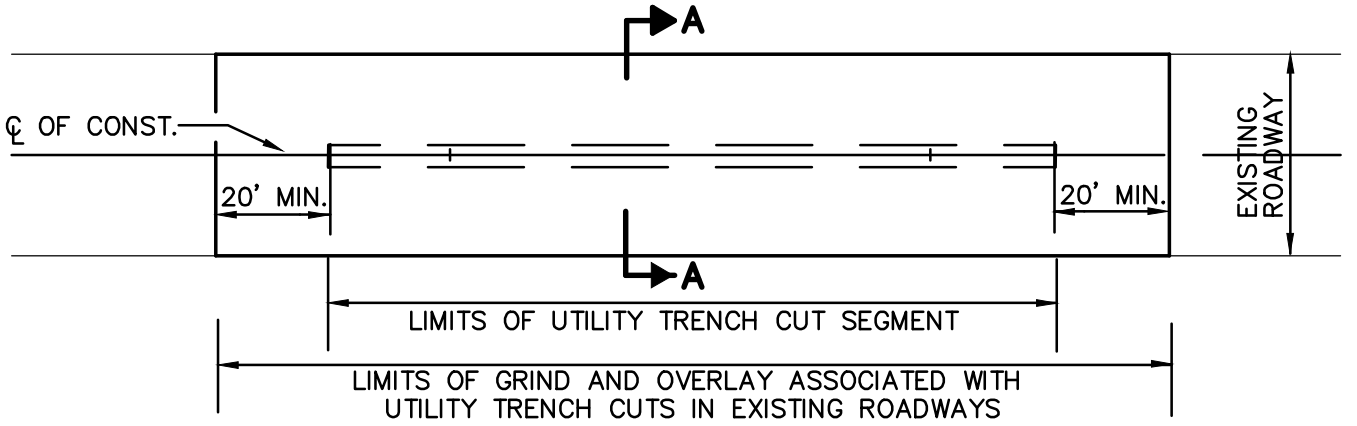

PLAN VIEW

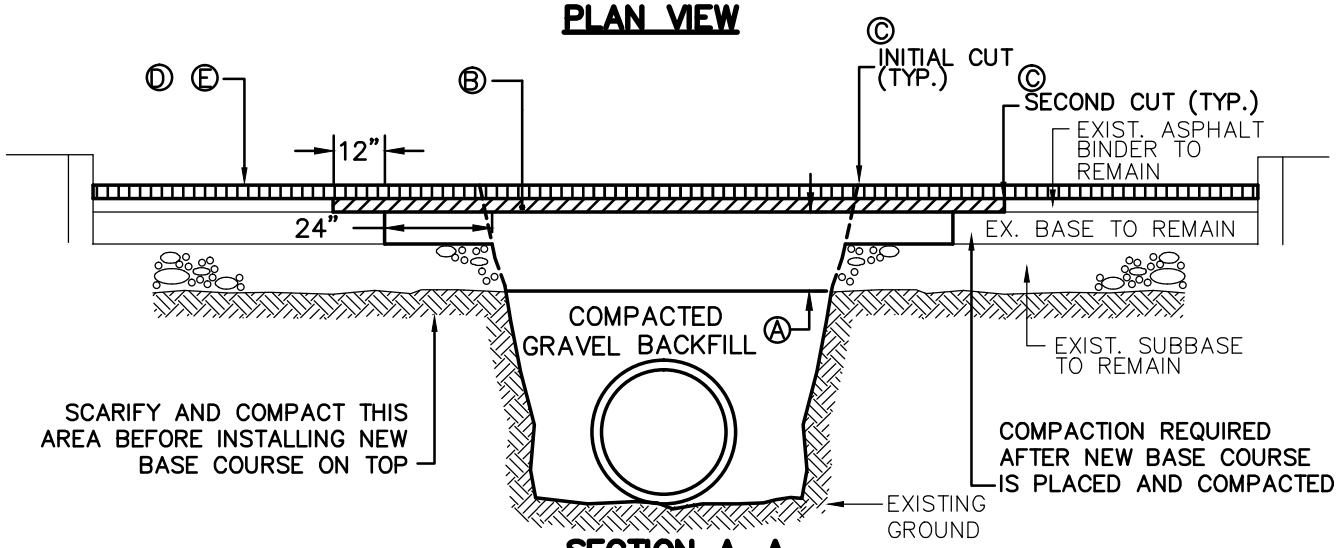

SECTION A–A

Ⓐ ADD 12" COMPACTED GRAVEL BASE COURSE TO LIMITS SHOWN.

Ⓑ INSTALL NOT LESS THAN A 2" COMPACTED BITUMINOUS CONCRETE BINDER TO LIMITS SHOWN.

Ⓒ SEAL ALL CUT PAVEMENT JOINTS AND EDGES WITH HOT–POURED LIQUID ASPHALT.

Ⓓ FINAL OVERLAY OVER THE GRINDED FULL WIDTH ROADWAY TO LIMITS SHOWN IN PLAN ABOVE. TYPICAL 2" COMPACTED TYPE I–1 BITUMINOUS CONCRETE ROLLED CURB TO CURB WITHOUT SURFACE BUMPS OR DEPRESSIONS AND FLUSH WITH FACE OF CURBS OR EXISTING EDGES.

Ⓔ RE–ESTABLISH ALL DISTURBED CENTERLINE AND GUTTERLINE THERMOPLASTIC MARKINGS.

UNLESS OTHERWISE NOTED, CONSTRUCTION METHODS, MATERIAL REQUIREMENTS AND METHOD OF MEASUREMENT SHALL BE IN ACCORDANCE WITH THE LATEST EDITION OF THE MASSACHUSETTS DEPARTMENT OF TRANSPORTATION (MASS DOT) STANDARD SPECIFICATIONS.

ALSO REFERENCE CURRENT MASS DOT CONSTRUCTION AND TRAFFIC STANDARD DETAILS.

	DEDHAM DPW **DESIGN & CONSTRUCTION STANDARDS** PAVEMENT RESTORATION FOR UTILITY TRENCHING IN CRACKED PAVEMENT AREAS	SCALE: NTS	DATE OF ISSUE: FEBRUARY 2011
		REVISED:	
		DETAIL NUMBER: SDSW.20	

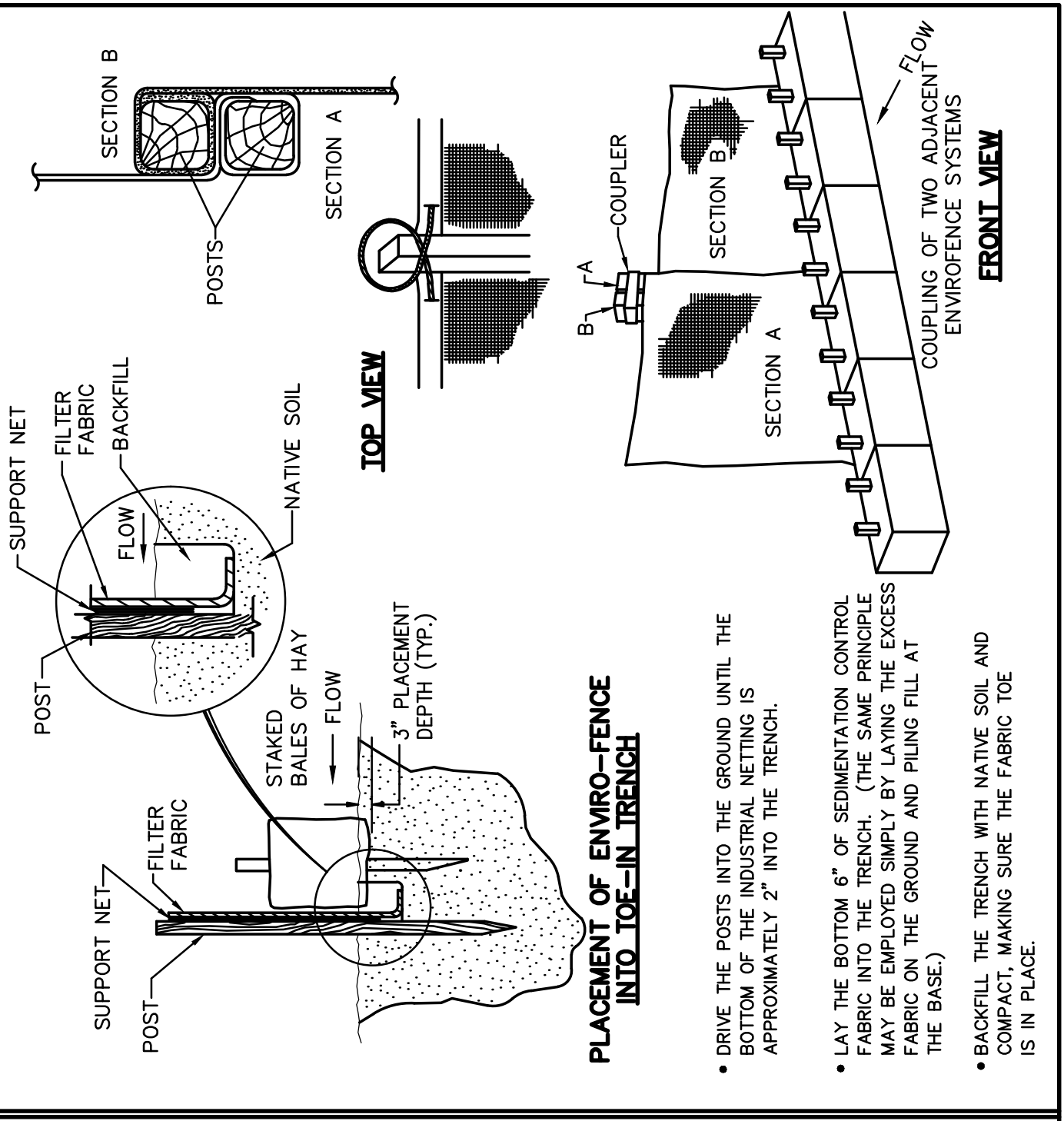

UNLESS OTHERWISE NOTED, CONSTRUCTION METHODS, MATERIAL REQUIREMENTS AND METHOD OF MEASUREMENT SHALL BE IN ACCORDANCE WITH THE LATEST EDITION OF THE MASSACHUSETTS DEPARTMENT OF TRANSPORTATION (MASS DOT) STANDARD SPECIFICATIONS.

ALSO REFERENCE CURRENT MASS DOT CONSTRUCTION AND TRAFFIC STANDARD DETAILS.

	DEDHAM DPW **DESIGN & CONSTRUCTION STANDARDS** SILTATION FENCE	SCALE: NTS	DATE OF ISSUE: FEBRUARY 2011
		REVISED:	
		DETAIL NUMBER: SDSW.21	

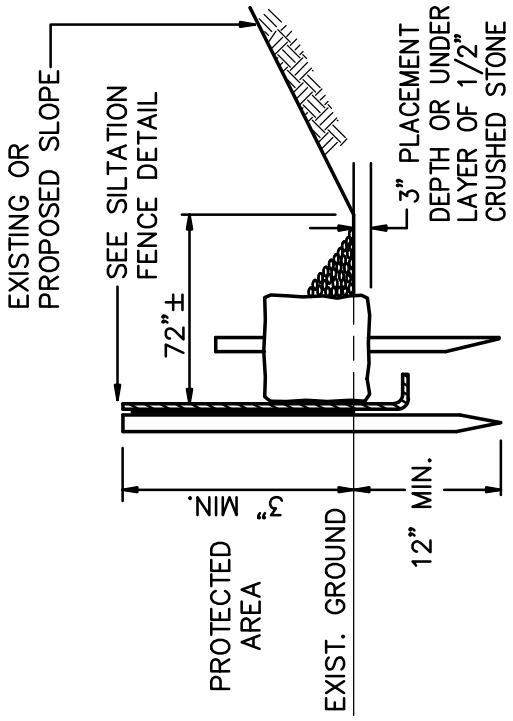

ELEVATION (TYPE 'C')

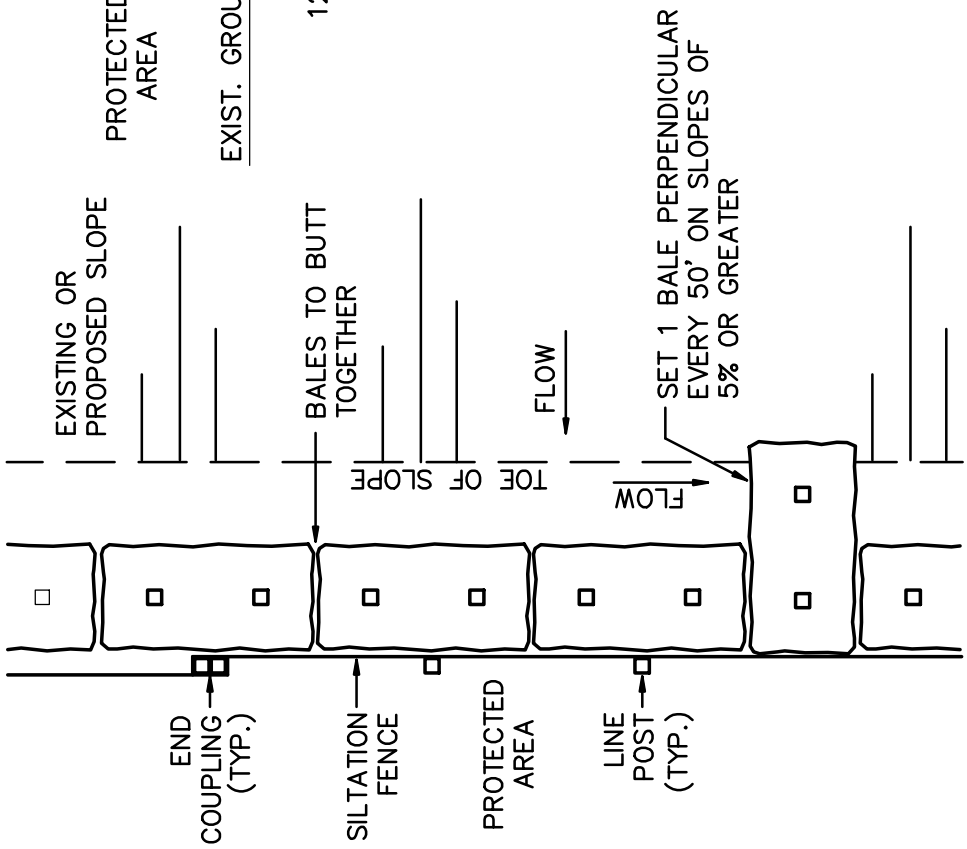

PLAN (TYPE 'C')

UNLESS OTHERWISE NOTED, CONSTRUCTION METHODS, MATERIAL REQUIREMENTS AND METHOD OF MEASUREMENT SHALL BE IN ACCORDANCE WITH THE LATEST EDITION OF THE MASSACHUSETTS DEPARTMENT OF TRANSPORTATION (MASS DOT) STANDARD SPECIFICATIONS.

ALSO REFERENCE CURRENT MASS DOT CONSTRUCTION AND TRAFFIC STANDARD DETAILS.

DEDHAM DPW
DESIGN & CONSTRUCTION STANDARDS

BALES OF HAY & SILTATION FENCE

SCALE:	DATE OF ISSUE:
NTS	FEBRUARY 2011
REVISED:	
DETAIL NUMBER: SDSW.22	

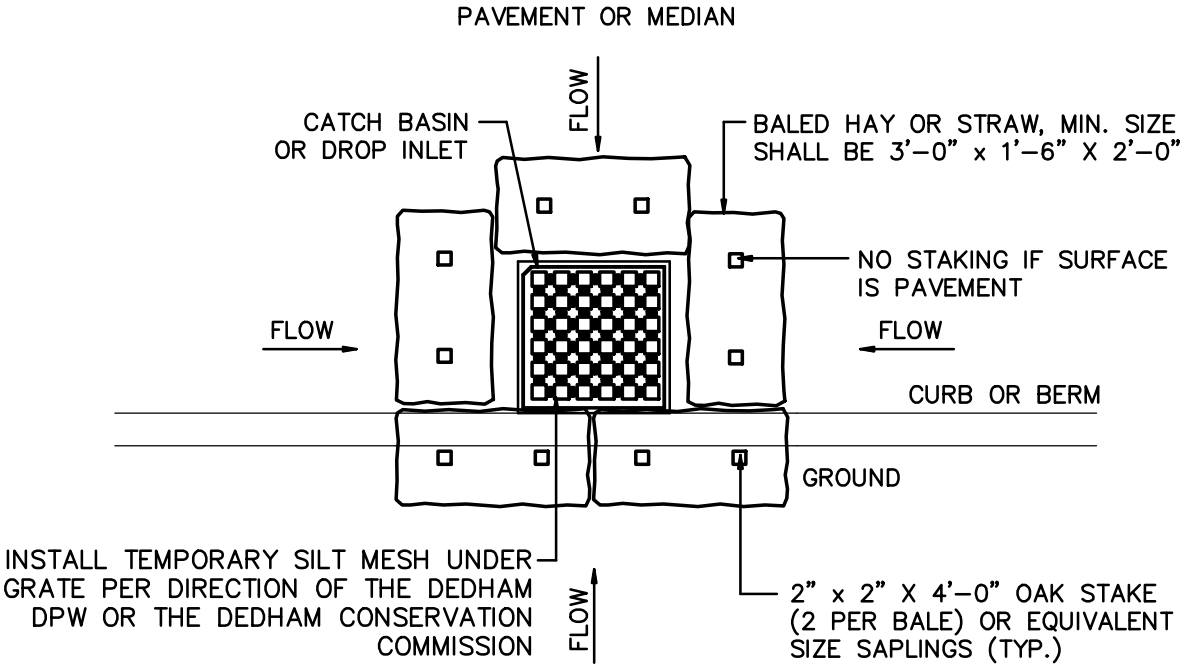

PLAN

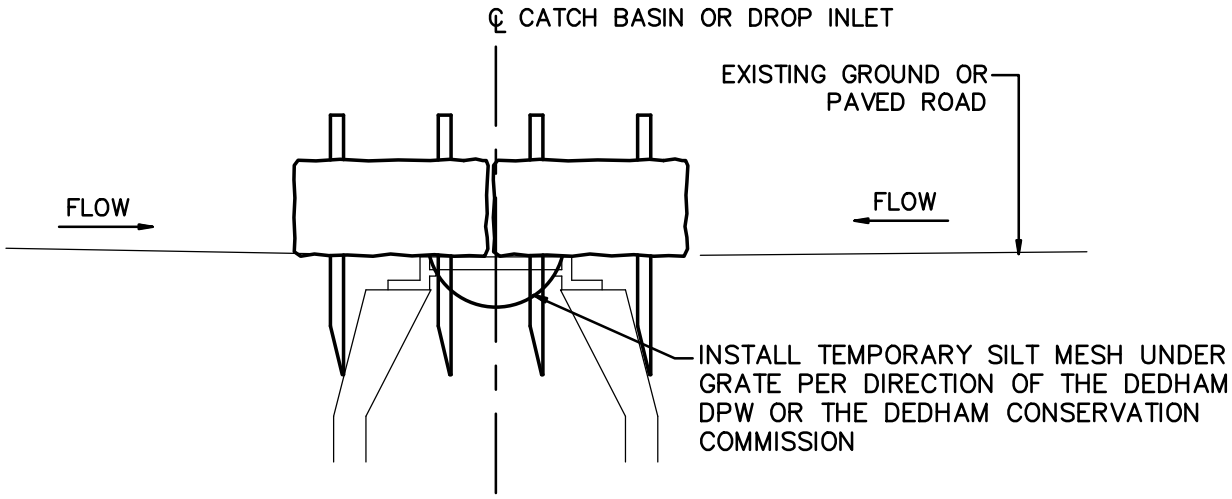

SECTION

UNLESS OTHERWISE NOTED, CONSTRUCTION METHODS, MATERIAL REQUIREMENTS AND METHOD OF MEASUREMENT SHALL BE IN ACCORDANCE WITH THE LATEST EDITION OF THE MASSACHUSETTS DEPARTMENT OF TRANSPORTATION (MASS DOT) STANDARD SPECIFICATIONS.

ALSO REFERENCE CURRENT MASS DOT CONSTRUCTION AND TRAFFIC STANDARD DETAILS.

	DEDHAM DPW **DESIGN & CONSTRUCTION STANDARDS** DRAIN INLET PROTECTION	SCALE: NTS	DATE OF ISSUE: FEBRUARY 2011
		REVISED:	
		DETAIL NUMBER: SDSW.23	

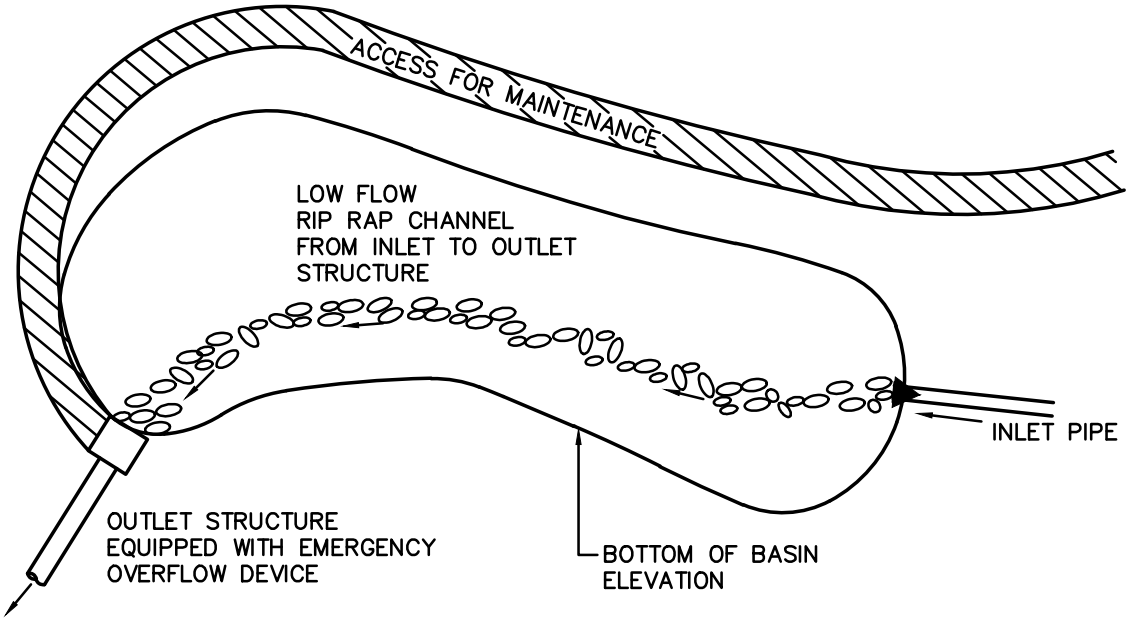

NOTE: DETENTION BASIN MUST BE DESIGNED BY A PROFESSIONAL ENGINEER REGISTERED IN MASSACHUSETTS

1. BASIN CONTOURS ARE TO BLEND WITH THE NATURAL TOPOGRAPHY OF THE LAND.

2. THE BOTTOM OF THE BASIN IS TO BE SET 2 FEET MINIMUM ABOVE HIGH GROUNDWATER.

3. THE MAXIMUM SIDE SLOPES OF THE DETENTION BASIN SHALL BE 4 FEET HORIZONTAL TO 1 FOOT VERTICAL.

4. BASIN IS TO BE TREATED WITH 6 INCHES OF MODIFIED LOAM BORROW AND SEEDED WITH A WATER–TOLERABLE GRASS MIXTURE.

5. A 10 FOOT WIDE MAINTENANCE ACCESSWAY SHALL BE PROVIDED TO THE OUTLET STRUCTURE. THE MAINTENANCE WAY SHALL BE CONSTRUCTED ON A STABILIZED GRAVEL BASE. THE MAXIMUM SLOPE OF THE WAY SHALL BE 6 PERCENT.

6. THE TOP OF BASIN SHALL BE SET 1 FOOT ABOVE THE 100 YEAR FLOOD ELEVATION.

7. THE OUTLET STRUCTURE SHALL BE PLACED AS FAR AS PRACTICAL FROM THE INLET PIPE.

UNLESS OTHERWISE NOTED, CONSTRUCTION METHODS, MATERIAL REQUIREMENTS AND METHOD OF MEASUREMENT SHALL BE IN ACCORDANCE WITH THE LATEST EDITION OF THE MASSACHUSETTS DEPARTMENT OF TRANSPORTATION (MASS DOT) STANDARD SPECIFICATIONS.

ALSO REFERENCE CURRENT MASS DOT CONSTRUCTION AND TRAFFIC STANDARD DETAILS.

DEDHAM DPW
DESIGN & CONSTRUCTION STANDARDS

TYPICAL DETENTION BASIN
PLAN VIEW

SCALE:	DATE OF ISSUE:
NTS	FEBRUARY 2011
REVISED:	
DETAIL NUMBER: SDSW.24	

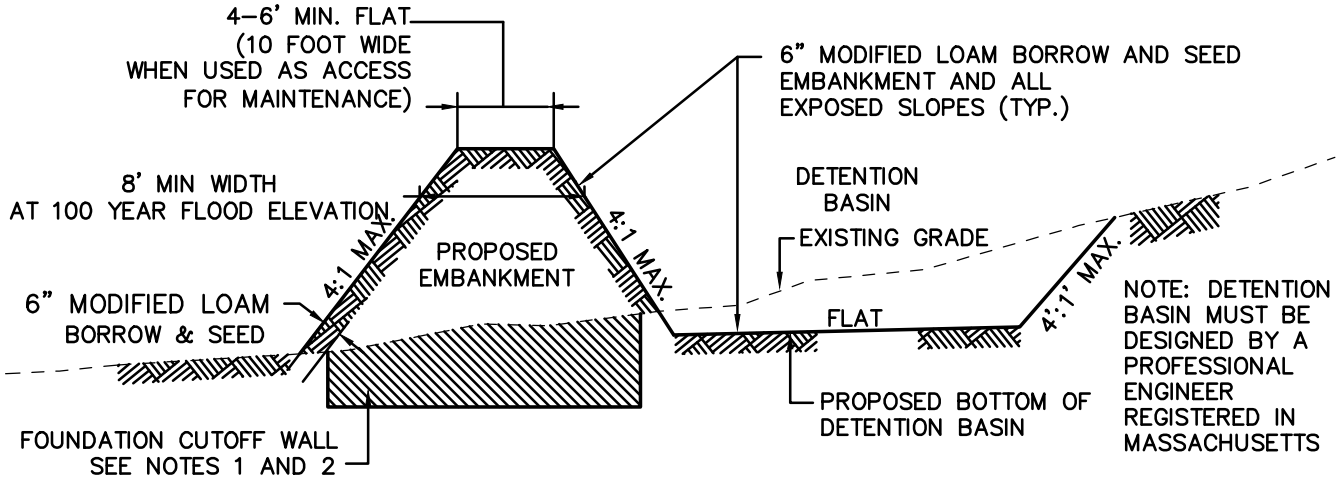

SECTION VIEW

1. THE AREA ON WHICH THE EMBANKMENT IS TO BE PLACED SHALL CONSIST OF MATERIAL THAT HAS SUFFICIENT BEARING STRENGTH TO SUPPORT THE EMBANKMENT WITHOUT EXCESSIVE CONSOLIDATION. ALL ORGANICS SHALL BE REMOVED. MINERAL SUBGRADE SHALL BE EXPOSED PRIOR TO CONSTRUCTION OF EMBANKMENT.

2. A FOUNDATION CUTOFF CONSTRUCTED OF COMPACTED IMPERMEABLE MATERIALS SHALL BE PROVIDED FOR EMBANKMENT. THE MINIMUM DEPTH OF CUTOFF SHALL BE 2 FEET. THE MINIMUM WIDTH SHALL BE WIDE ENOUGH TO PERMIT USE OF COMPACTING EQUIPMENT. COMPACTION REQUIREMENTS SHALL BE THE SAME AS THOSE FOR THE EMBANKMENT.

3. THE HEIGHT OF THE EMBANKMENT SHALL BE INCREASED BY THE AMOUNT NEEDED TO ENSURE THAT AFTER ALL SETTLEMENT HAS TAKEN PLACE, THE HEIGHT OF THE DAM WILL EQUAL OR EXCEED THE DESIGN HEIGHT. THIS INCREASE SHALL NOT BE LESS THAN 10 PERCENT WHEN COMPACTION IS BY HAULING EQUIPMENT OR 5 PERCENT IF COMPACTORS ARE USED.

4. EMBANKMENT SHALL BE CONSTRUCTED IN LIFTS OF LESS THAN 1 FOOT AND COMPACTED TO 95 PERCENT DENSITY.

5. OUTLET PIPE SHALL BE EQUIPPED WITH AN ANTI–SEEP COLLAR. PIPE SHALL BE INSTALLED AT THE TIME OF CONSTRUCTION OF THE EMBANKMENT TO ENSURE PROPER COMPACTION.

6. OUTLET CONTROL STRUCTURE SHALL BE EQUIPPED WITH A CONCRETE FOUNDATION TO PREVENT SETTLEMENT.

7. EMBANKMENT SHALL BE CONSTRUCTED OF GOOD ORDINARY BORROW AS DEFINED BY MASSACHUSETTS HIGHWAY DEPARTMENT.

8. EMBANKMENT SHALL BE CAPPED WITH 6 INCHES OF MODIFIED LOAM BORROW AND SEEDED WITH WATER–TOLERABLE GRASS MIXTURE.

9. WOODED VEGETATION SHALL NOT BE PERMITTED ON THE EMBANKMENT. OPERATION AND MAINTENANCE PLAN SHALL BE REQUIRED.

UNLESS OTHERWISE NOTED, CONSTRUCTION METHODS, MATERIAL REQUIREMENTS AND METHOD OF MEASUREMENT SHALL BE IN ACCORDANCE WITH THE LATEST EDITION OF THE MASSACHUSETTS DEPARTMENT OF TRANSPORTATION (MASS DOT) STANDARD SPECIFICATIONS.

ALSO REFERENCE CURRENT MASS DOT CONSTRUCTION AND TRAFFIC STANDARD DETAILS.

DEDHAM DPW
DESIGN & CONSTRUCTION STANDARDS

TYPICAL DETENTION BASIN
ON SLOPING GRADE

SCALE:	DATE OF ISSUE:
NTS	FEBRUARY 2011
REVISED:	
DETAIL NUMBER: SDSW.25	

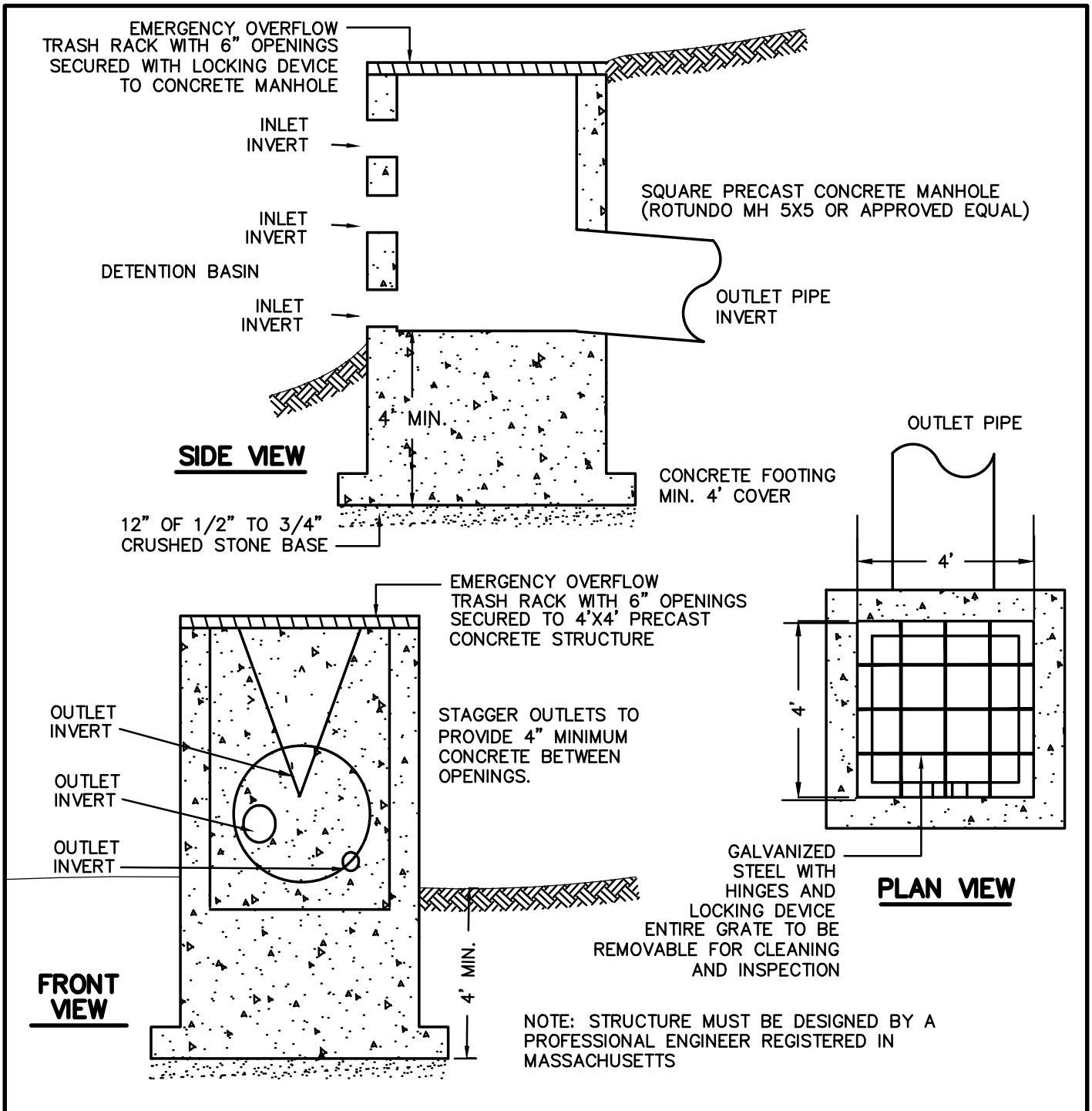

UNLESS OTHERWISE NOTED, CONSTRUCTION METHODS, MATERIAL REQUIREMENTS AND METHOD OF MEASUREMENT SHALL BE IN ACCORDANCE WITH THE LATEST EDITION OF THE MASSACHUSETTS DEPARTMENT OF TRANSPORTATION (MASS DOT) STANDARD SPECIFICATIONS.

ALSO REFERENCE CURRENT MASS DOT CONSTRUCTION AND TRAFFIC STANDARD DETAILS.

	DEDHAM DPW **DESIGN & CONSTRUCTION STANDARDS** TYPICAL MULTI–INLET STORMWATER CONTROL STRUCTURE	SCALE: NTS	DATE OF ISSUE: FEBRUARY 2011
		REVISED:	
		DETAIL NUMBER: SDSW.26	

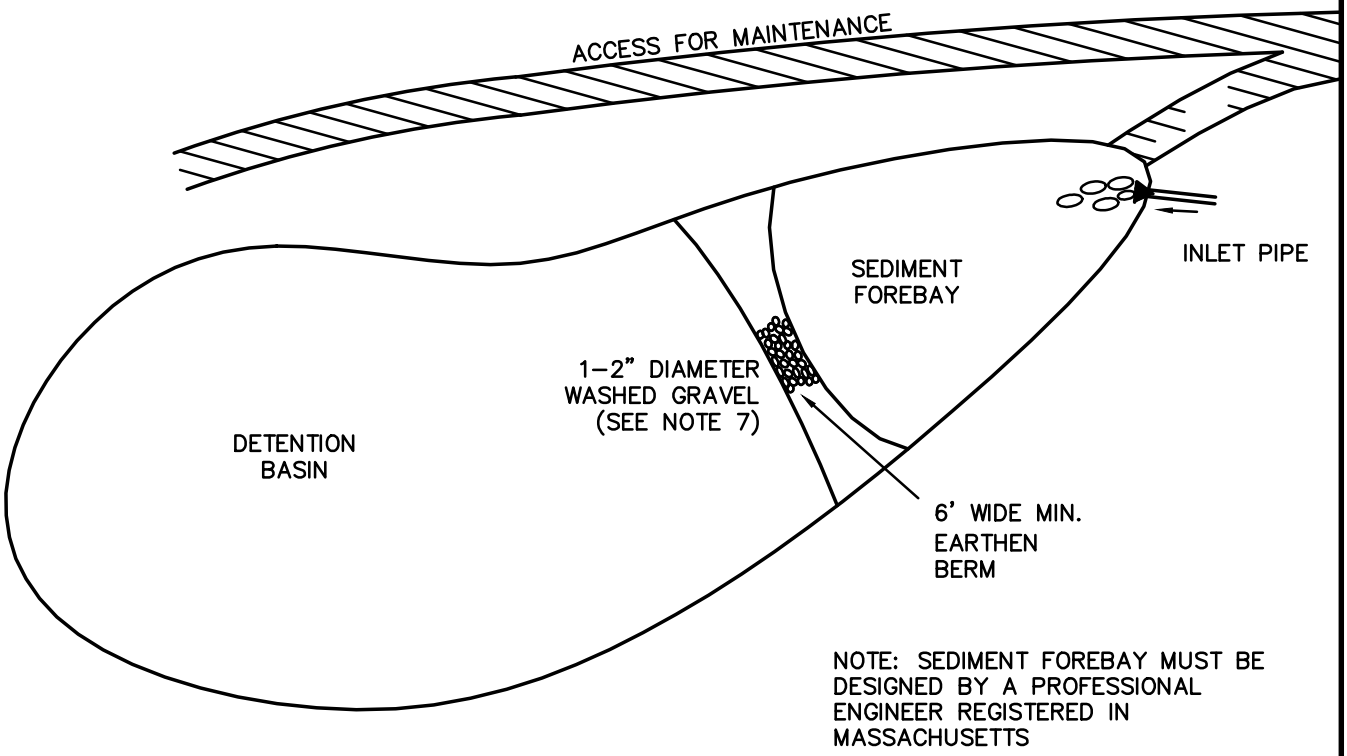

1. FOREBAY IS TO BE SIZED TO CONTAIN 0.1 INCH OF RUNOFF PER ACRE CONTRIBUTING WATERSHED.

2. MAXIMUM DEPTH OF FOREBAY IS 6 FEET.

3. THE MAXIMUM SIDE SLOPES OF THE FOREBAY SHALL BE 4 FEET HORIZONTAL TO 1 FOOT VERTICAL.

4. FOREBAY IS TO BE TREATED WITH 6 INCHES OF MODIFIED LOAM BORROW AND SEEDED WITH A WATER–TOLERABLE GRASS MIXTURE.

5. A 12 FOOT WIDE MAINTENANCE ACCESS WAY SHALL BE PROVIDED TO THE FOREBAY. THE MAINTENANCE WAY SHALL BE CONSTRUCTED ON A STABILIZED GRAVEL BASE. THE MAXIMUM SLOPE OF THE WAY SHALL BE 6 PERCENT.

6. THE OUTLET FROM THE SEDIMENT FOREBAY SHALL BE PLACED AS FAR AS PRACTICAL FROM THE INLET PIPE.

7. LENGTH OF SEDIMENT TRAP OUTLET IS TO BE 6x THE CONTRIBUTING DRAINAGE AREA (IN ACRES) IN ACCORDANCE WITH THE MASSACHUSETTS STORMWATER MANAGEMENT POLICY.

UNLESS OTHERWISE NOTED, CONSTRUCTION METHODS, MATERIAL REQUIREMENTS AND METHOD OF MEASUREMENT SHALL BE IN ACCORDANCE WITH THE LATEST EDITION OF THE MASSACHUSETTS DEPARTMENT OF TRANSPORTATION (MASS DOT) STANDARD SPECIFICATIONS.

ALSO REFERENCE CURRENT MASS DOT CONSTRUCTION AND TRAFFIC STANDARD DETAILS.

DEDHAM DPW
DESIGN & CONSTRUCTION STANDARDS

TYPICAL SEDIMENT FOREBAY

SCALE:	DATE OF ISSUE:
NTS	FEBRUARY 2011
REVISED:	
DETAIL NUMBER: SDSW.27	

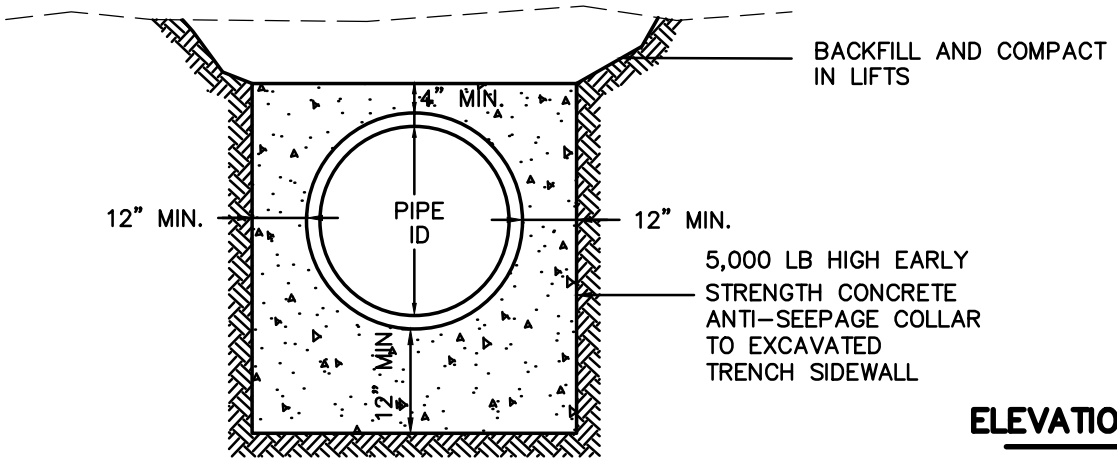

ELEVATION VIEW

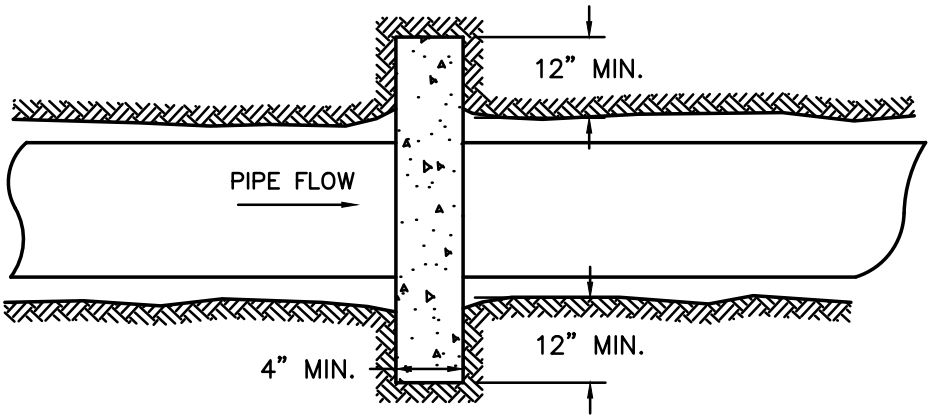

PLAN VIEW

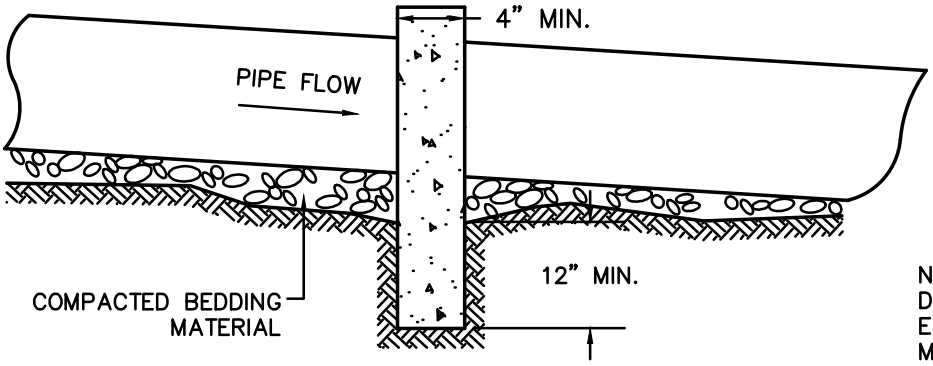

PROFILE VIEW

NOTE: STRUCTURE MUST BE DESIGNED BY A PROFESSIONAL ENGINEER REGISTERED IN MASSACHUSETTS

UNLESS OTHERWISE NOTED, CONSTRUCTION METHODS, MATERIAL REQUIREMENTS AND METHOD OF MEASUREMENT SHALL BE IN ACCORDANCE WITH THE LATEST EDITION OF THE MASSACHUSETTS DEPARTMENT OF TRANSPORTATION (MASS DOT) STANDARD SPECIFICATIONS.

ALSO REFERENCE CURRENT MASS DOT CONSTRUCTION AND TRAFFIC STANDARD DETAILS.

DEDHAM DPW
DESIGN & CONSTRUCTION STANDARDS

STORM DRAIN ANTI-SEEPAGE COLLAR

SCALE:	DATE OF ISSUE:
NTS	FEBRUARY 2011
REVISED:	
DETAIL NUMBER: SDSW.28	

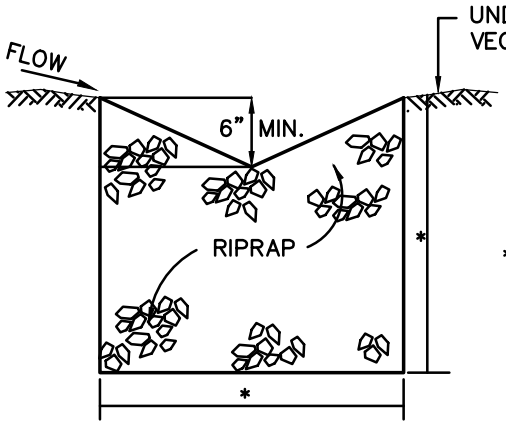

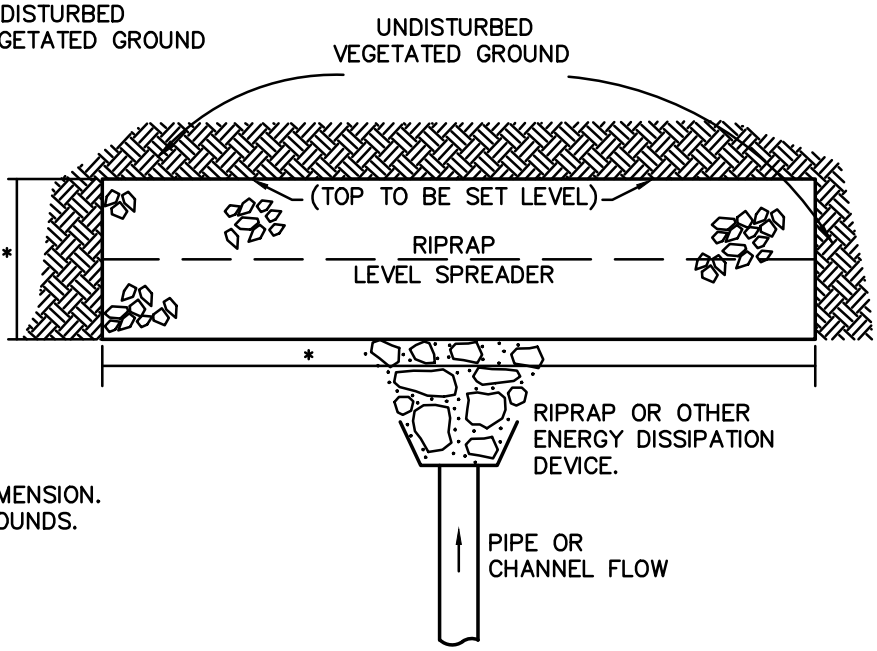

NOTE: RIPRAP TO BE 8" MINIMUM DIMENSION.
75% OF STONE SHALL BE 70–100 POUNDS.

PROFILE VIEW

PLAN VIEW

*DIMENSIONS OF LEVEL SPREADER TO BE DETERMINED BY A PROFESSIONAL ENGINEER REGISTERED IN MASSACHUSETTS IN ACCORDANCE WITH THE, "MASSACHUSETTS EROSION AND SEDIMENT CONTROL GUIDELINES FOR URBAN AND SUBURBAN AREAS, A GUIDE FOR PLANNERS, DESIGNERS AND MUNICIPAL OFFICIALS"

UNLESS OTHERWISE NOTED, CONSTRUCTION METHODS, MATERIAL REQUIREMENTS AND METHOD OF MEASUREMENT SHALL BE IN ACCORDANCE WITH THE LATEST EDITION OF THE MASSACHUSETTS DEPARTMENT OF TRANSPORTATION (MASS DOT) STANDARD SPECIFICATIONS.

ALSO REFERENCE CURRENT MASS DOT CONSTRUCTION AND TRAFFIC STANDARD DETAILS.

DEDHAM DPW
DESIGN & CONSTRUCTION STANDARDS

TYPICAL STORMWATER
DISCHARGE LEVEL SPREADER

SCALE:	DATE OF ISSUE:
NTS	FEBRUARY 2011
REVISED:	
DETAIL NUMBER: SDSW.29	

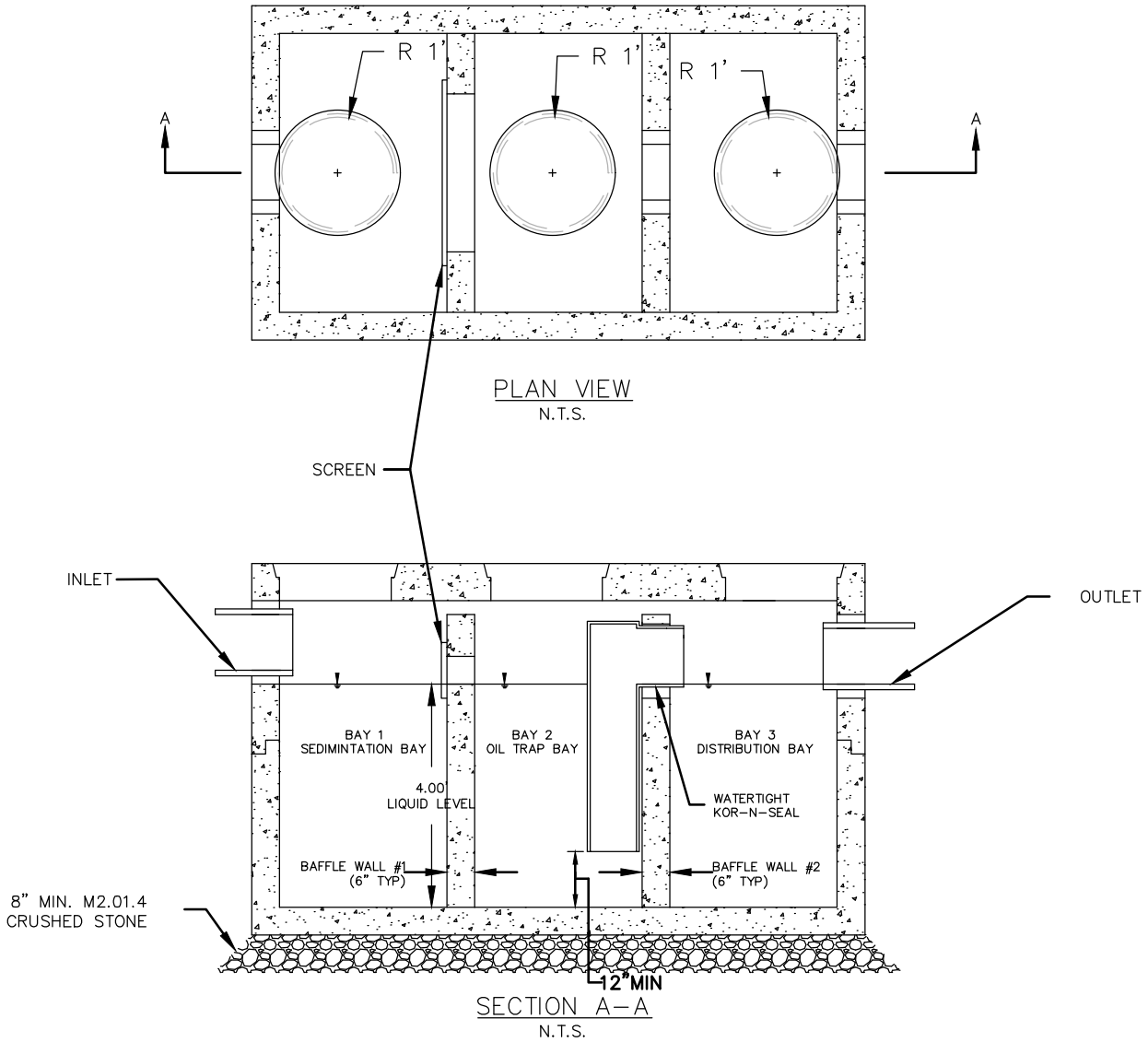

** SEE DETAIL SDSW.37A FOR NOTES. **

UNLESS OTHERWISE NOTED, CONSTRUCTION METHODS, MATERIAL REQUIREMENTS AND METHOD OF MEASUREMENT SHALL BE IN ACCORDANCE WITH THE LATEST EDITION OF THE MASSACHUSETTS DEPARTMENT OF TRANSPORTATION (MASS DOT) STANDARD SPECIFICATIONS.

ALSO REFERENCE CURRENT MASS DOT CONSTRUCTION AND TRAFFIC STANDARD DETAILS.

	DEDHAM DPW **DESIGN & CONSTRUCTION STANDARDS** STORMWATER WATER QUALITY INLET	SCALE: NTS	DATE OF ISSUE: FEBRUARY 2011
		REVISED:	
		DETAIL NUMBER: SDSW.30	

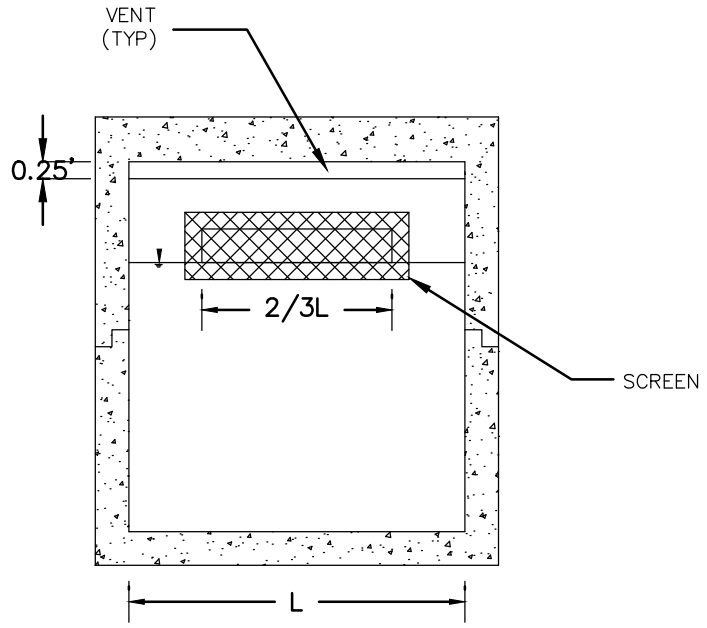

BAFFLE WALL #1
N.T.S.

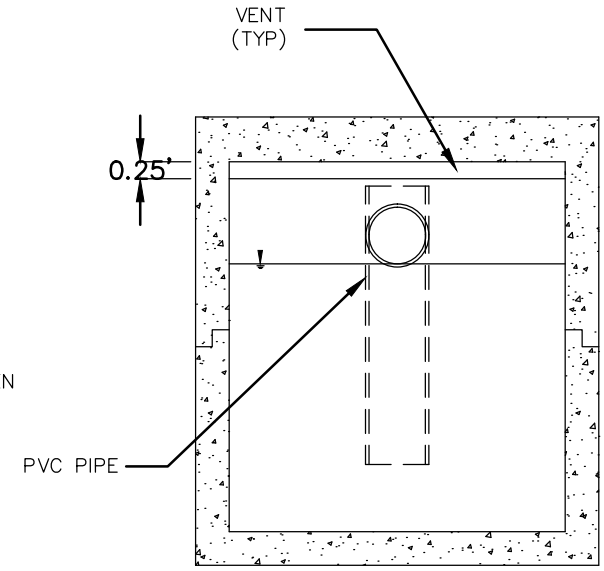

BAFFLE WALL #2
N.T.S.

NOTE:

1. CONCRETE SHALL BE 5,000 PSI MINIMUM STRENGTH AT 28 DAYS.
2. STEEL REINFORCEMENT SHALL BE ASTM–615, GRADE 60 AND SHALL BE COVERED WITH A MINIMUM OF 1" OF CONCRETE.
3. TANK SHALL BE DESIGNED TO MEET ASTMC858 AND ACI 318 WITH AASHTO H–20 LOADING WITH A MAXIMUM COVER OF 5 FEET.
4. ALL CONSTRUCTION JOINTS SHALL BE SEALED WITH 1" DIAMETER BUTYL RUBBER OR APPROVED EQUAL.
5. BAFFLE WALLS SHALL BE INTEGRALLY CAST AS PART OF BASE UNIT.
6. PVC PIPE IN BAY 2 SHALL BE ATTACHED TO BAFFLE WALL #2 USING STAINLESS STEEL STRAPING.
7. SCREEN SHALL BE MADE OF NON–COROSIVE MATERIAL SUCH AS STAINLESS STEEL, HDPE OR APPROVED EQUAL.
8. SCREEN SHALL BE BOLTED TO BAFFLE WALL #1 USING LEAD ANCHORS AND STAINLESS STEEL BOLTS AT A MINIMUM OF 1 FOOT ON CENTER.
9. COPOLYMER STEPS SHALL BE INSTALLED AT 12" ON CENTER FOR THE FULL DEPTH OF THE STRUCTURE FOR EACH BAY.
10. TANK SHALL BE DESIGNED TO MEET OR EXCEED THE LATEST EDITIONS OF THE MASS DEP STORMWATER STANDARDS AND TOWN OF DEDHAM DRAINAGE AND STORMWATER MANAGEMENT DESIGN STANDARDS.

UNLESS OTHERWISE NOTED, CONSTRUCTION METHODS, MATERIAL REQUIREMENTS AND METHOD OF MEASUREMENT SHALL BE IN ACCORDANCE WITH THE LATEST EDITION OF THE MASSACHUSETTS DEPARTMENT OF TRANSPORTATION (MASS DOT) STANDARD SPECIFICATIONS.

ALSO REFERENCE CURRENT MASS DOT CONSTRUCTION AND TRAFFIC STANDARD DETAILS.

DEDHAM DPW
DESIGN & CONSTRUCTION STANDARDS

STORMWATER WATER QUALITY INLET
BAFFLE WALL DETAILS

SCALE:	DATE OF ISSUE:
NTS	FEBRUARY 2011
REVISED:	
DETAIL NUMBER: SDSW.30A	

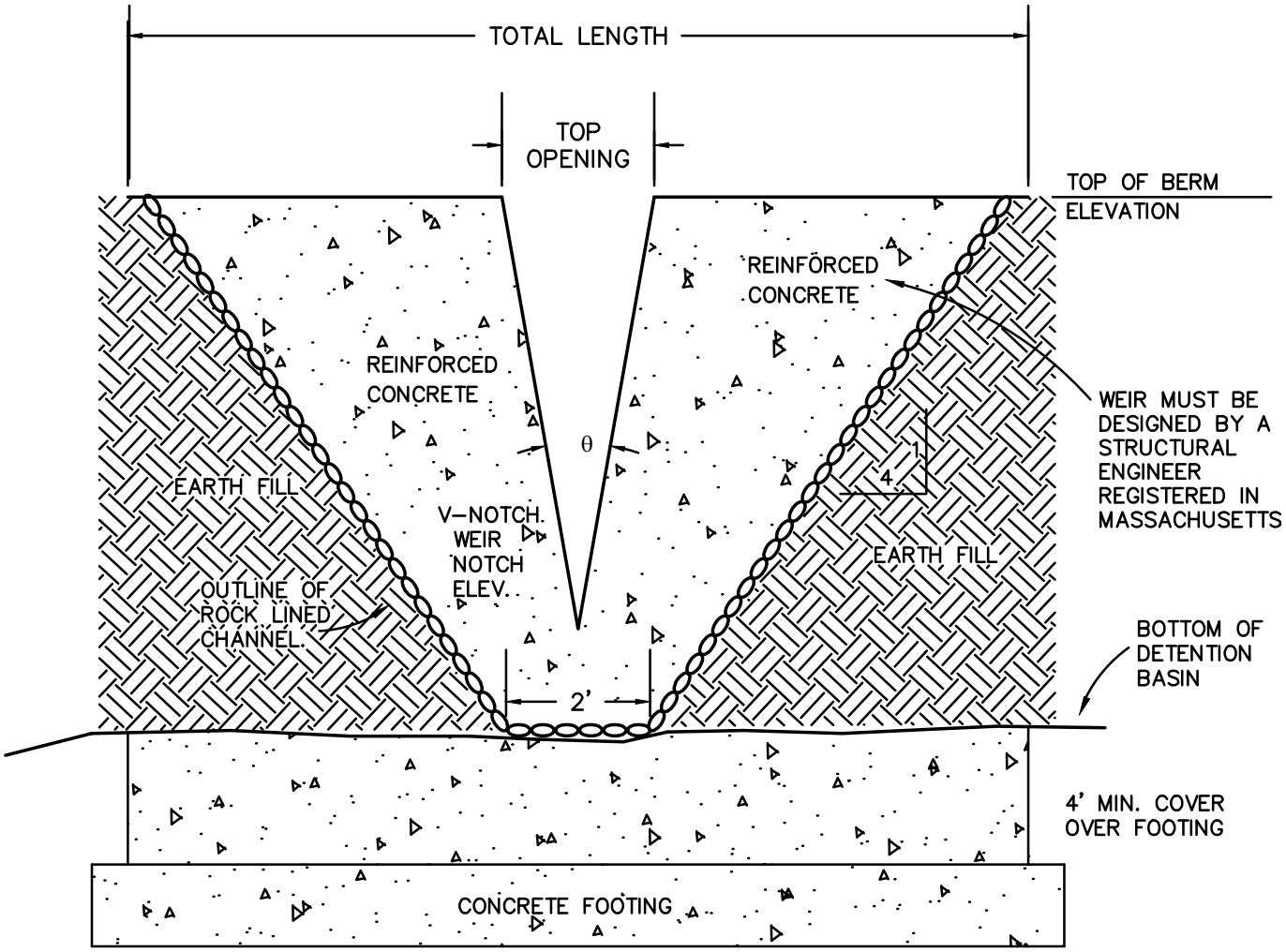

UNLESS OTHERWISE NOTED, CONSTRUCTION METHODS, MATERIAL REQUIREMENTS AND METHOD OF MEASUREMENT SHALL BE IN ACCORDANCE WITH THE LATEST EDITION OF THE MASSACHUSETTS DEPARTMENT OF TRANSPORTATION (MASS DOT) STANDARD SPECIFICATIONS.

ALSO REFERENCE CURRENT MASS DOT CONSTRUCTION AND TRAFFIC STANDARD DETAILS.

DEDHAM DPW
DESIGN & CONSTRUCTION STANDARDS

V-NOTCH WEIR

SCALE:	DATE OF ISSUE:
NTS	FEBRUARY 2011
REVISED:	
DETAIL NUMBER: SDSW.31	

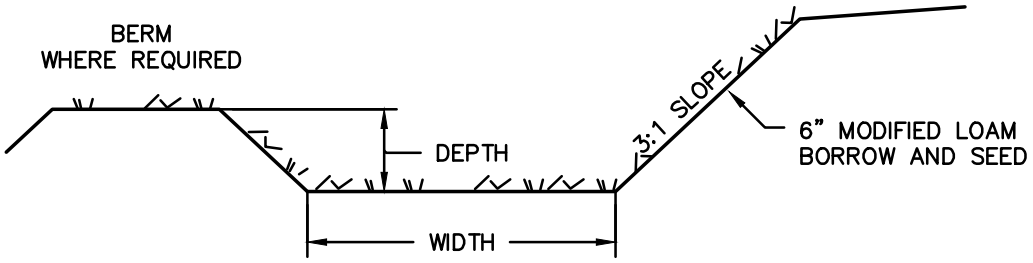

NOTE: VEGETATED DITCH MUST BE DESIGNED BY A PROFESSIONAL ENGINEER REGISTERED IN MASSACHUSETTS

1. SWALE CAPACITY SHALL BE BASED ON THE MAXIMUM EXPECTED REDUCTION IN VELOCITY WHICH OCCURS WHEN VEGETATION IS AT ITS MAXIMUM GROWTH FOR THE YEAR.

2. THE MAXIMUM EROSIVE VELOCITY SHALL BE BASED ON THE MINIMUM GROWTH PERIOD. VELOCITY SHALL NOT EXCEED THE 'PERMISSIBLE VELOCITIES FOR CHANNELS LINED WITH GRASS', TABLE 10.13 OF THE MASSACHUSETTS HIGHWAY STANDARDS.

3. THE SWALE IS TO BE TREATED WITH 6 INCHES OF MODIFIED LOAM BORROW AND SEEDED WITH A WATER–TOLERABLE GRASS MIXTURE.

4. THE MAXIMUM SIDE SLOPES OF THE SWALE SHALL BE 3 FEET HORIZONTAL TO 1 FOOT VERTICAL.

5. THE LONGITUDINAL SLOPE OF THE SWALE SHALL BE AS CLOSE TO ZERO AS POSSIBLE AND NOT GREATER THAN 5 PERCENT.

6. SWALE SHALL BE DESIGNED TO CAPTURE AND TREAT THE ENTIRE PRESCRIBED STORMWATER RUNOFF WATER QUALITY VOLUME.

UNLESS OTHERWISE NOTED, CONSTRUCTION METHODS, MATERIAL REQUIREMENTS AND METHOD OF MEASUREMENT SHALL BE IN ACCORDANCE WITH THE LATEST EDITION OF THE MASSACHUSETTS DEPARTMENT OF TRANSPORTATION (MASS DOT) STANDARD SPECIFICATIONS.

ALSO REFERENCE CURRENT MASS DOT CONSTRUCTION AND TRAFFIC STANDARD DETAILS.

DEDHAM DPW
DESIGN & CONSTRUCTION STANDARDS

TYPICAL VEGETATED DITCH

SCALE:	DATE OF ISSUE:
NTS	FEBRUARY 2011
REVISED:	
DETAIL NUMBER: SDSW.32	

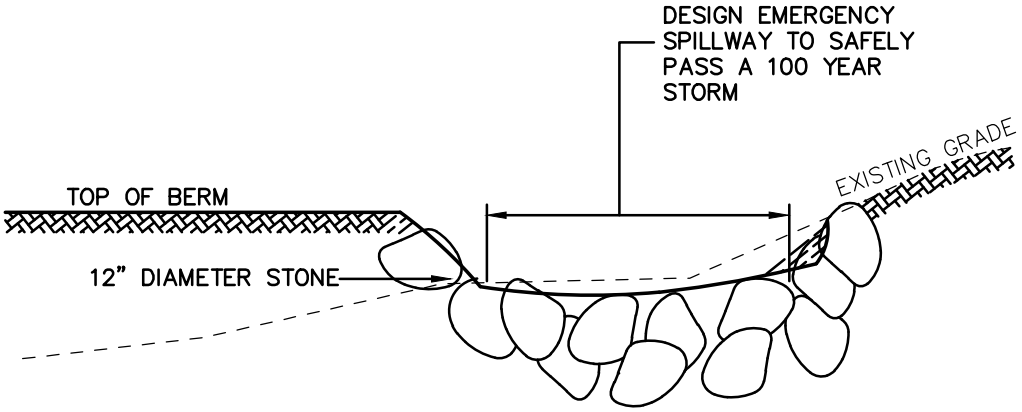

NOTE: EMERGENCY SPILLWAY MUST BE DESIGNED BY A PROFESSIONAL ENGINEER REGISTERED IN MASSACHUSETTS.

EMERGENCY SPILLWAY IS NOT TO BE CONSTRUCTED IN THE BASIN'S EMBANKMENT (SEE PLAN FOR LOCATION).

UNLESS OTHERWISE NOTED, CONSTRUCTION METHODS, MATERIAL REQUIREMENTS AND METHOD OF MEASUREMENT SHALL BE IN ACCORDANCE WITH THE LATEST EDITION OF THE MASSACHUSETTS DEPARTMENT OF TRANSPORTATION (MASS DOT) STANDARD SPECIFICATIONS.

ALSO REFERENCE CURRENT MASS DOT CONSTRUCTION AND TRAFFIC STANDARD DETAILS.

DEDHAM DPW
DESIGN & CONSTRUCTION STANDARDS

TYPICAL EMERGENCY OVERFLOW SPILLWAY

SCALE:	DATE OF ISSUE:
NTS	FEBRUARY 2011
REVISED:	
DETAIL NUMBER: SDSW.33	

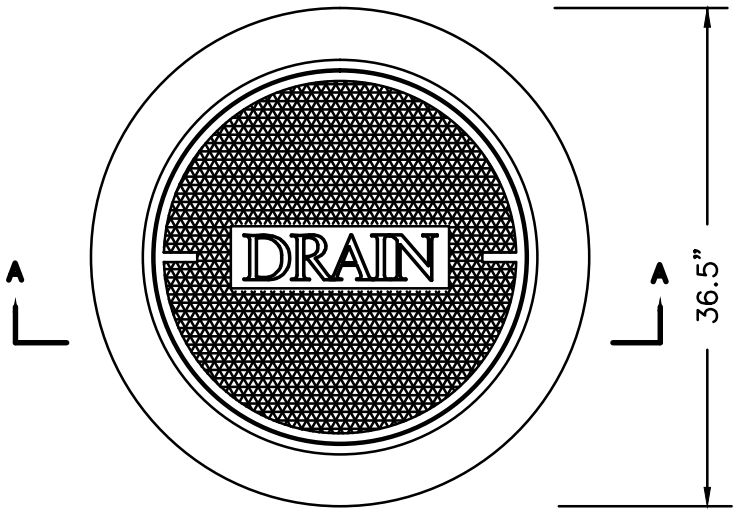

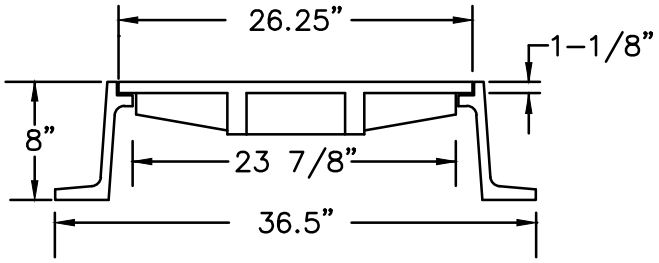

SECTION A-A

NOTE:

FRAME AND COVER SHALL BE EAST JORDAN IRON WORKS CATALOG NOS. 2110A & 2114Z MARKED "DRAIN", OR APPROVED EQUAL.

UNLESS OTHERWISE NOTED, CONSTRUCTION METHODS, MATERIAL REQUIREMENTS AND METHOD OF MEASUREMENT SHALL BE IN ACCORDANCE WITH THE LATEST EDITION OF THE MASSACHUSETTS DEPARTMENT OF TRANSPORTATION (MASS DOT) STANDARD SPECIFICATIONS.

ALSO REFERENCE CURRENT MASS DOT CONSTRUCTION AND TRAFFIC STANDARD DETAILS.

	DEDHAM DPW **DESIGN & CONSTRUCTION STANDARDS** MANHOLE FRAME & COVER MARKED DRAIN	SCALE: NTS	DATE OF ISSUE: FEBRUARY 2011
		REVISED:	
		DETAIL NUMBER: SDSW.34	

SANITARY SEWER

DESCRIPTION	DETAIL NUMBER
GENERAL NOTES FOR PIPE TRENCHES	SS.01
TRENCH DIAMETER FOR SEWER PIPE (18 INCH DIAMETER AND SMALLER)	SS.02
TRENCH SECTION IN UNSUITABLE MATERIAL	SS.03
MANHOLE RISER WITH ECCENTRIC CONE TOP	SS.04
4'-0" OR 5'-0" PRECAST REINFORCED CONCRETE MANHOLE BASE FOR SEWERS	SS.05
TYPICAL SUPPORTS FOR UTILITIES	SS.06
WATERTIGHT RESILIENT CONNECTOR FOR CONNECTING PIPES TO PRECAST CONCRETE MANHOLES	SS.07
NON-SHRINK MORTAR JOINTS FOR CONNECTING PIPES TO BRICK OR BLOCK MASONRY MANHOLES	SS.08
PRECAST REINFORCED CONCRETE SEWER CHIMNEY	SS.09
RECONSTRUCTED BUILDING CONNECTION	SS.10
INSIDE DROP INLETS FOR PVC PIPE SEWERS (12 INCH DIAMETER AND SMALLER)	SS.11
ABANDON EXISTING MANHOLES/CESSPOOLS	SS.12

DEDHAM DPW
DESIGN & CONSTRUCTION STANDARDS

DETAIL INDEX
SANITARY SEWER

SCALE: NTS
DATE OF ISSUE: FEBRUARY 2011
REVISED:
DETAIL NUMBER: SS–INDEX.01

SANITARY SEWER
CONTINUED

DESCRIPTION	DETAIL NUMBER
TYPICAL SEWER PLAN	SS.13
TYPICAL SEWER PROFILE	SS.14
TYPICAL SEWER CLEANOUT DETAIL	SS.15
TYPICAL OUTSIDE DROP MANHOLE DETAIL	SS.16
FORCE MAIN CLEANOUT MANHOLE DETAIL	SS.17
PIPE TRENCH DAM DETAIL	SS.18
WYE-SADDLE DETAIL FOR R.C. PIPE SERVICE CONNECTION	SS.19
P.V.C. WYE-BRANCH DETAIL	SS.20
TYPICAL SEWER CLEANOUT DETAIL WITHIN 10' OF BUILDING FOUNDATION	SS.21
MANHOLE FRAME & COVER MARKED SEWER	SS.22

GENERAL NOTES

FOR PIPE TRENCHES

1. PIPE TRENCHES MAY BE EXCAVATED WIDER THAN TRENCH WIDTH Ws (SHEETED) OR Wu (UNSHEETED) ABOVE THE TOP OF PIPE ZONE.

2. TRENCHES SHALL NOT BE EXCAVATED BEYOND THE TRENCH WIDTH Wu BELOW THE TOP OF PIPE ZONE.

3. SHEETING MUST BE USED IF EXCAVATION AND BACKFILL, BELOW NORMAL DEPTH, IS REQUIRED. SHEETING SHALL BE LEFT IN PLACE AS SPECIFIED.

4. ALL ROCK WITHIN 3'–0" HORIZONTALLY OF THE ENDS OF BUILDING CONNECTIONS, BRANCHES OR STUBS AND DOWN TO A HORIZONTAL PLANE 6" BELOW THE BOTTOMS OF SUCH CONNECTIONS, BRANCHES OR STUBS, SHALL BE EXCAVATED.

5. WHERE INDICATED ON THE DRAWINGS, GEOTEXTILE FILTER FABRIC SHALL BE PROVIDED FOR SEWER AND BUILDING CONNECTION FOUNDATIONS. OVERLAP FABRIC ABOVE THE PIPE CROWN AND PROVIDE A MINIMUM OF 12" FABRIC OVERLAP.

TRENCH WIDTH Ws OR Wu		
NOMINAL PIPE DIAMETER D	DEPTH OF PIPE INVERT BELOW GROUND SURFACE	
	0 TO 12'	12' TO 20'
24" AND SMALLER	5'–0"	7'–0"
OVER 24"	D + 3'–0"	D + 5'–0"

DEDHAM DPW
DESIGN & CONSTRUCTION STANDARDS

GENERAL NOTES FOR PIPE TRENCHES

SCALE:	DATE OF ISSUE:
NTS	FEBRUARY 2011
REVISED:	
DETAIL NUMBER: SS.01	

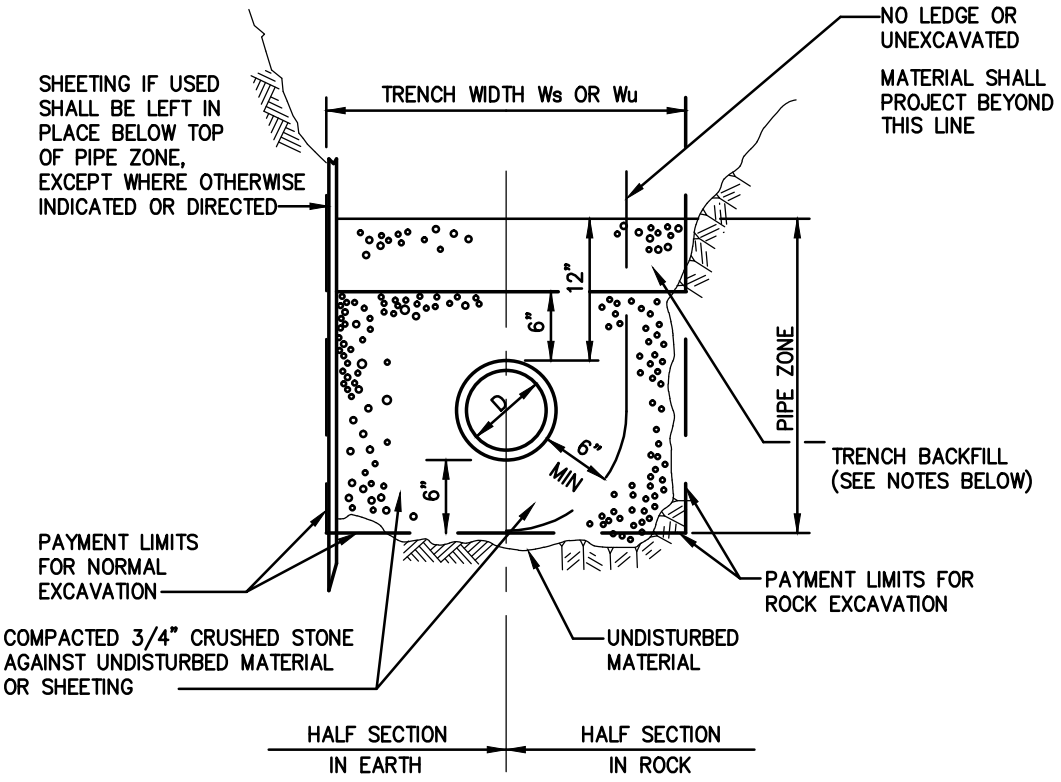

NOTES:

1. TRENCH BACKFILL TO BE USED WITHIN THE RIGHT-OF-WAY SHALL CONSIST OF EITHER GRAVEL BORROW MEETING MHD SPECIFICATION M1.03.0, TYPE "B" OR PROCESSED GRAVEL BORROW FOR SUBBASE MEETING MHD SPECIFICATION M1.03.1.

2. WHERE THE REMOVAL OF 100 SQUARE FEET OR LESS OF ASPHALT IS REQUIRED WITHIN THE RIGHT-OF-WAY, THEN THE TRENCH BACKFILL MATERIAL SHALL CONSIST OF CONTROLLED DENSITY FILL MEETING MHD SPECIFICATION M4.08.0, TYPE "1E" OR "2E".

3. TRENCH BACKFILL MATERIAL TO BE USED OUTSIDE OF THE RIGHT-OF-WAY MAY CONSIST OF MATERIAL GENERATED DURING EXCAVATIONS PROVIDED ALL STONES GREATER THAN 4" ARE REMOVED PRIOR TO PLACEMENT AND COMPACTION.

3. GRANULAR TRENCH BACKFILL MATERIAL USED WITHIN THE RIGHT-OF-WAY SHALL BE PLACED IN MAXIMUM 6" LIFTS AND MECHANICALLY COMPACTED TO A MINIMUM OF 95% OF THE MATERIAL'S MAXIMUM DRY DENSITY AND TO 90% ELSEWHERE AS DETERMINED BY ASTM D 1557.

	DEDHAM DPW **DESIGN & CONSTRUCTION STANDARDS**	SCALE: NTS	DATE OF ISSUE: FEBRUARY 2011
		REVISED:	
	TRENCH SECTION FOR SEWER PIPE 18 INCH DIAMETER AND SMALLER	DETAIL NUMBER: SS.02	

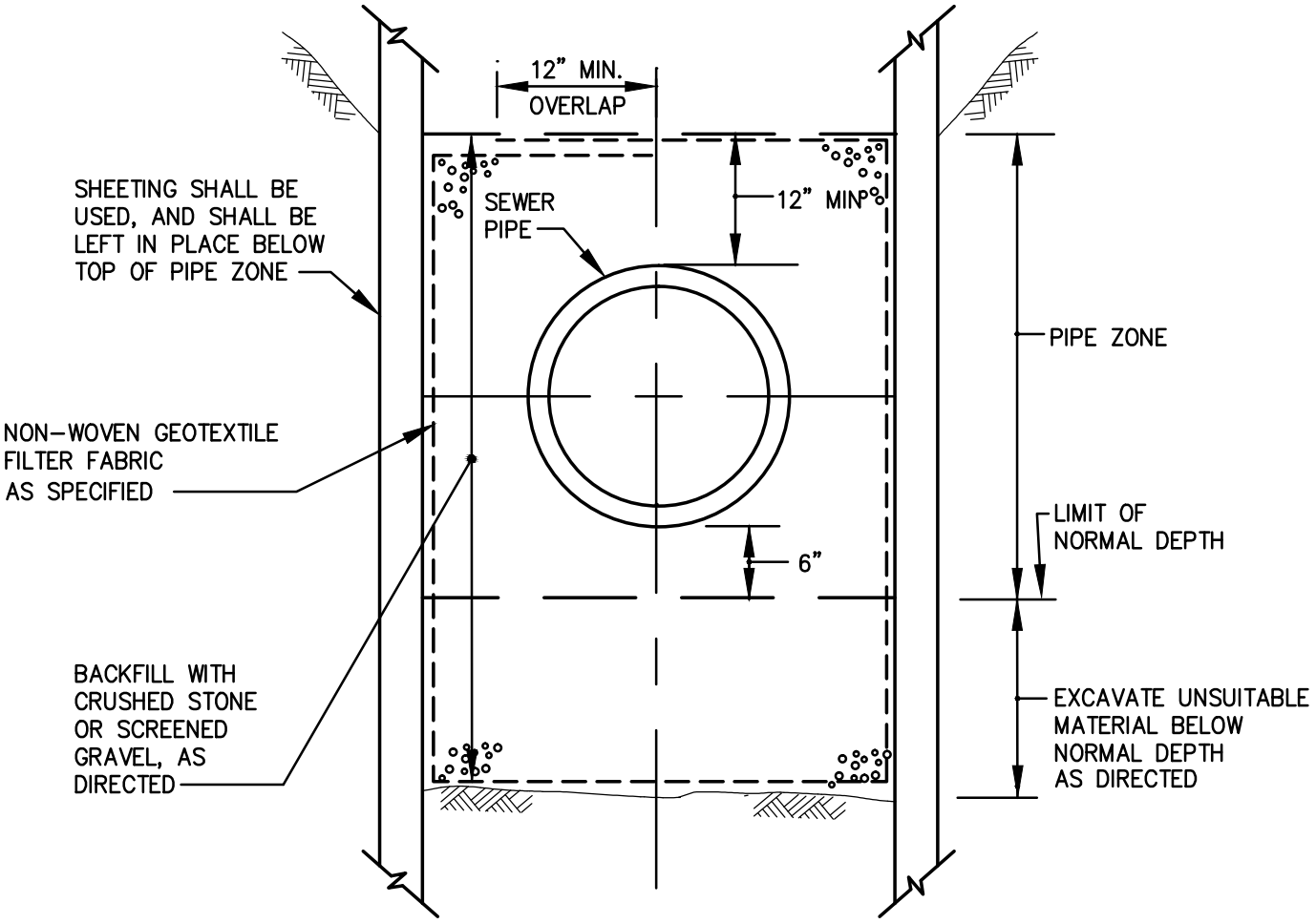

DETAILS NOT SHOWN ARE SAME AS TRENCH SECTIONS SHOWN ELSEWHERE

DEDHAM DPW
DESIGN & CONSTRUCTION STANDARDS

TRENCH SECTION IN UNSUITABLE MATERIAL

SCALE:	DATE OF ISSUE:
NTS	FEBRUARY 2011
REVISED:	
DETAIL NUMBER: SS.03	

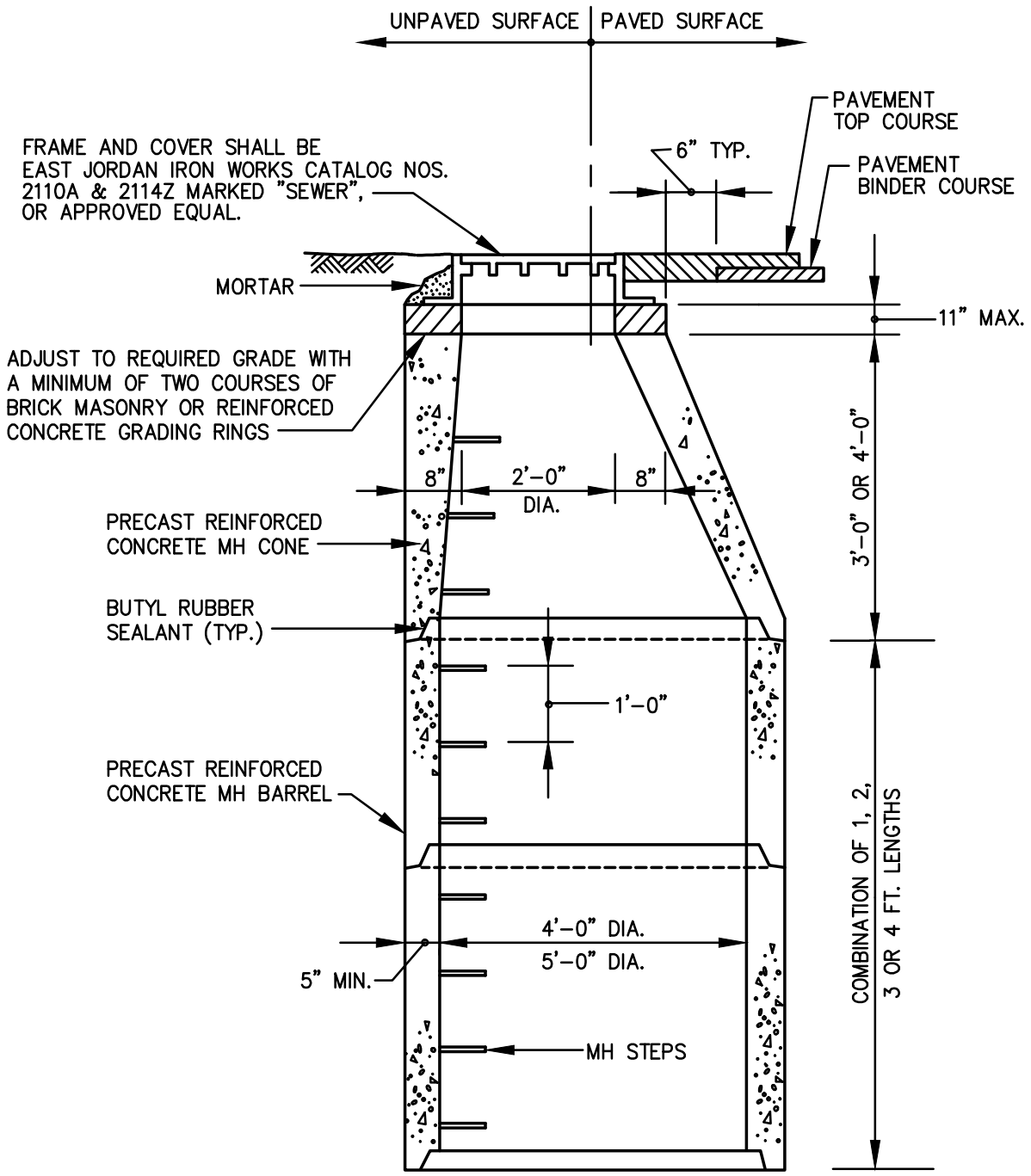

NOTE:
ALL EXTERIOR SURFACES OF MANHOLE GRADE ADJUSTMENT COURSES SHALL BE COVERED WITH 1/4" TO 3/8" MASONRY CEMENT PLASTER.

	DEDHAM DPW **DESIGN & CONSTRUCTION STANDARDS** MANHOLE RISER WITH ECCENTRIC CONE TOP	SCALE: NTS	DATE OF ISSUE: FEBRUARY 2011
		REVISED:	
		DETAIL NUMBER: SS.04	

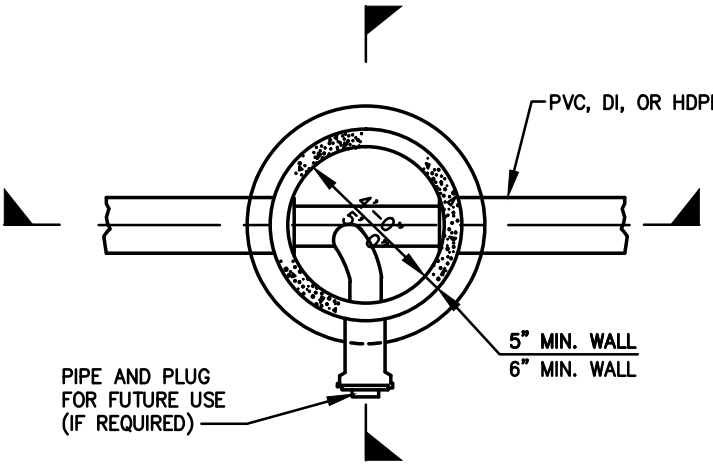

PLAN

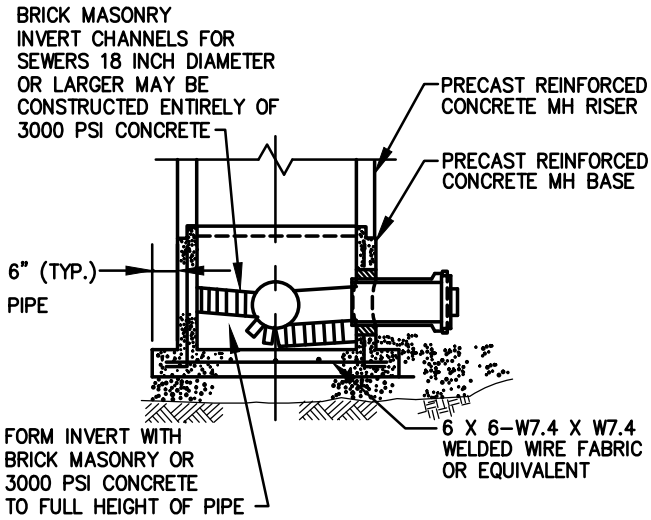

SECTION

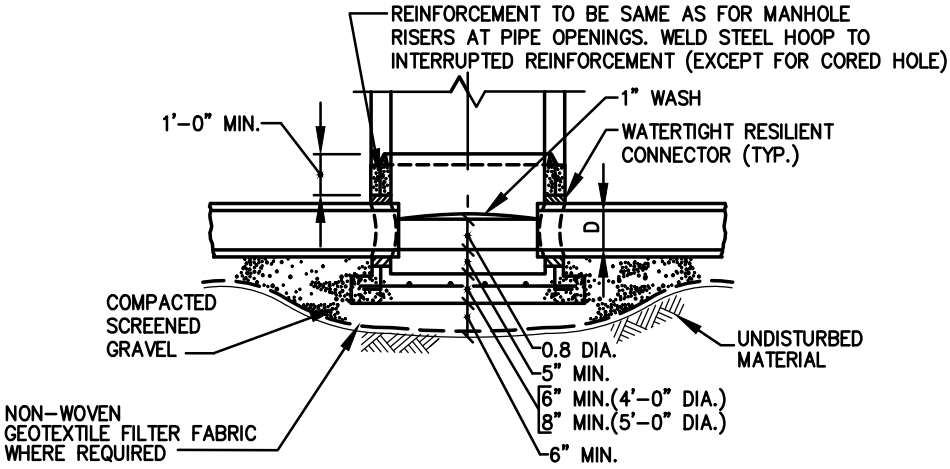

SECTION

	DEDHAM DPW **DESIGN & CONSTRUCTION STANDARDS** 4'-0" OR 5'-0" PRECAST REINFORCED CONCRETE MANHOLE BASE FOR SEWERS	SCALE: NTS	DATE OF ISSUE: FEBRUARY 2011
		REVISED:	
		DETAIL NUMBER: SS.05	

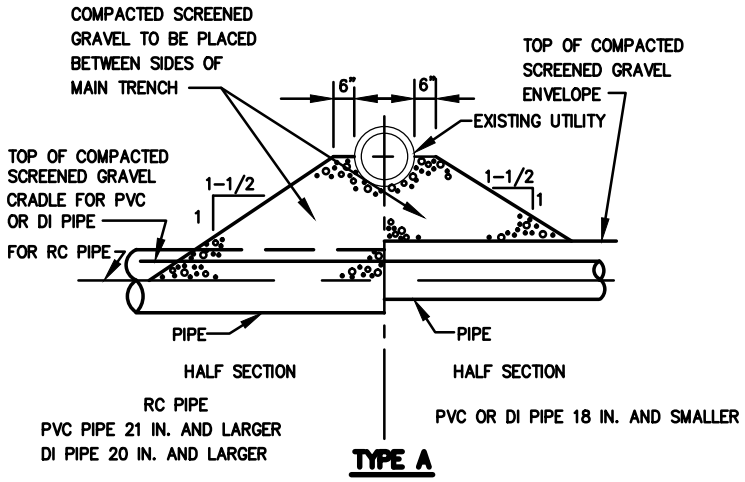

TYPE A

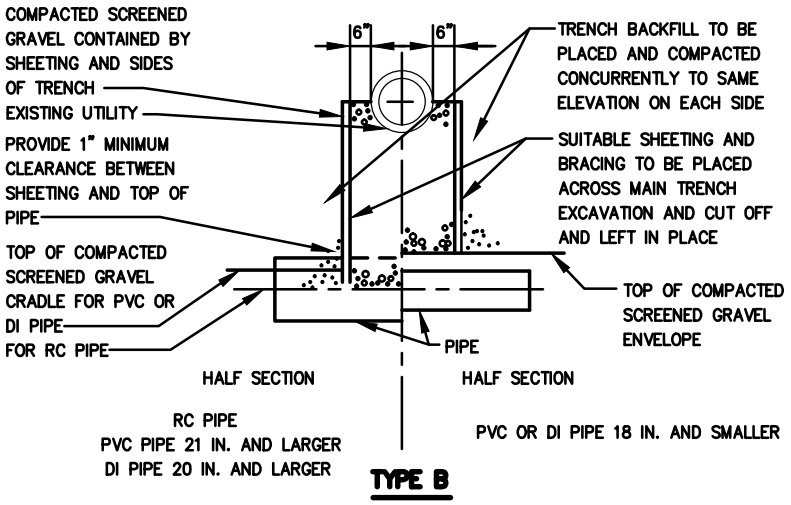

TYPE B

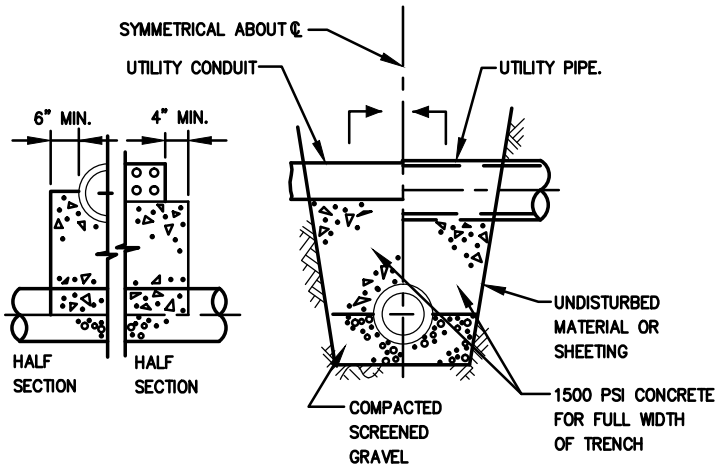

TYPE C

	DEDHAM DPW **DESIGN & CONSTRUCTION STANDARDS** TYPICAL SUPPORTS FOR UTILITIES	SCALE: NTS	DATE OF ISSUE: FEBRUARY 2011
		REVISED:	
		DETAIL NUMBER: SS.06	

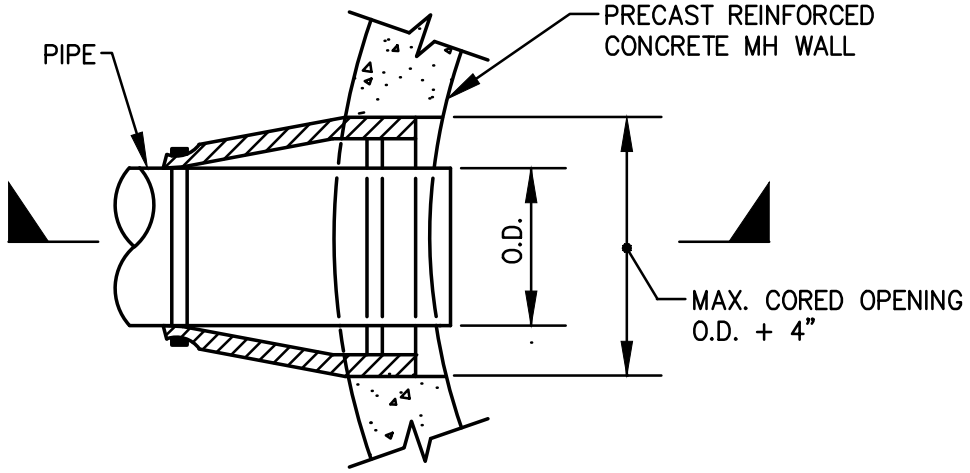

PLAN

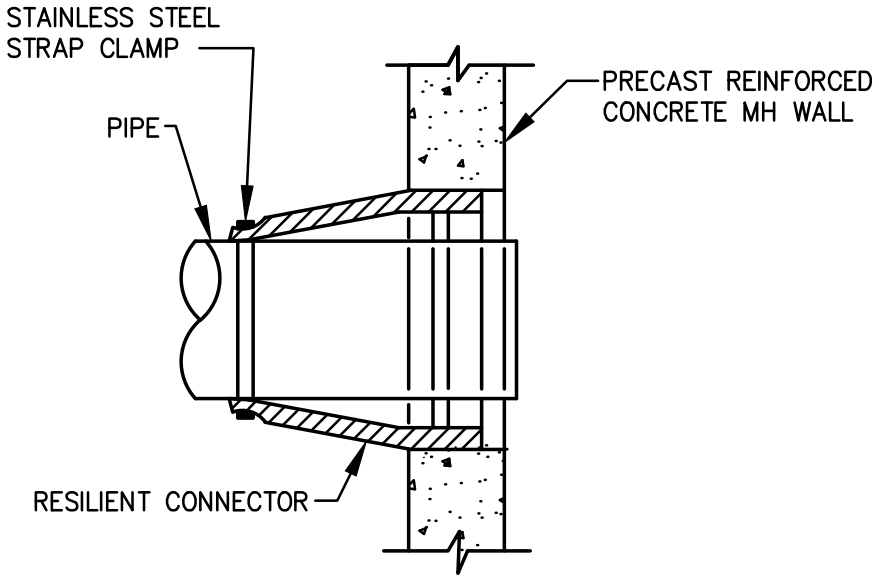

SECTION

	DEDHAM DPW **DESIGN & CONSTRUCTION STANDARDS** WATERTIGHT RESILIENT CONNECTOR FOR CONNECTING PIPES TO PRECAST CONCRETE MANHOLES	SCALE: NTS	DATE OF ISSUE: FEBRUARY 2011
		REVISED:	
		DETAIL NUMBER: SS.07	

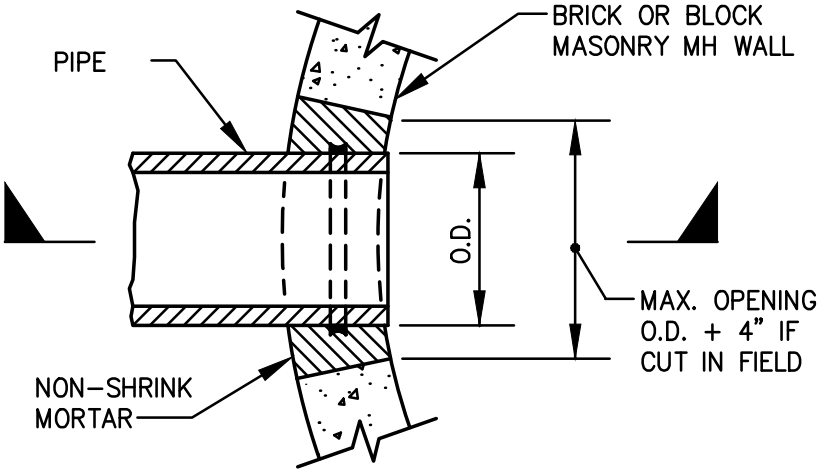

PLAN

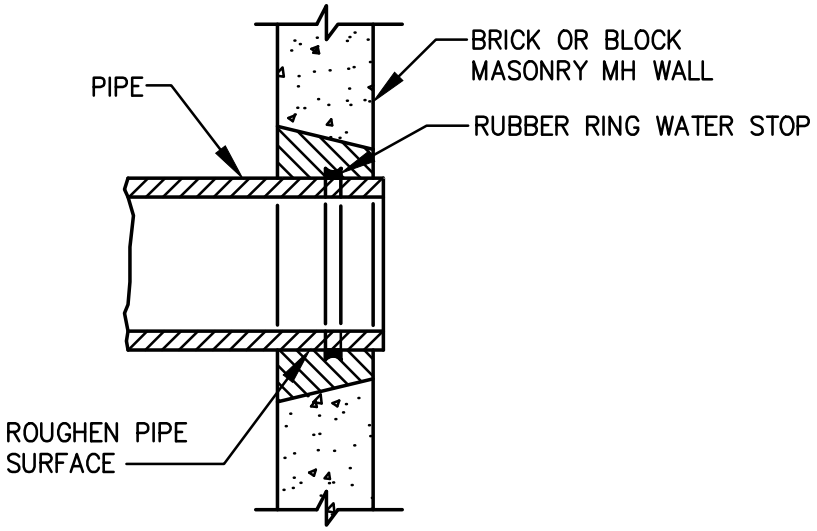

SECTION

	DEDHAM DPW **DESIGN & CONSTRUCTION STANDARDS** NON-SHRINK MORTAR JOINTS FOR CONNECTING PIPES TO BRICK OR BLOCK MASONRY MANHOLES	SCALE: NTS	DATE OF ISSUE: FEBRUARY 2011
		REVISED:	
		DETAIL NUMBER: SS.08	

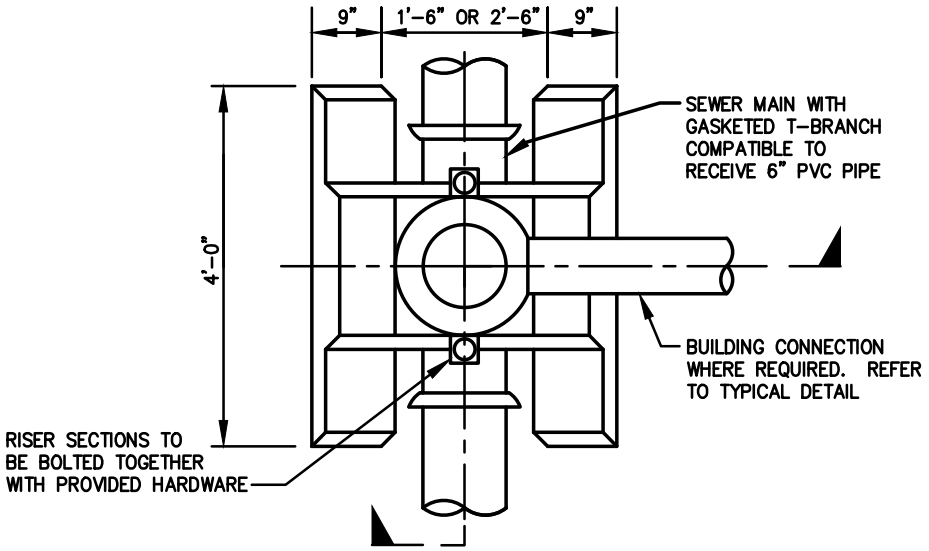

PLAN

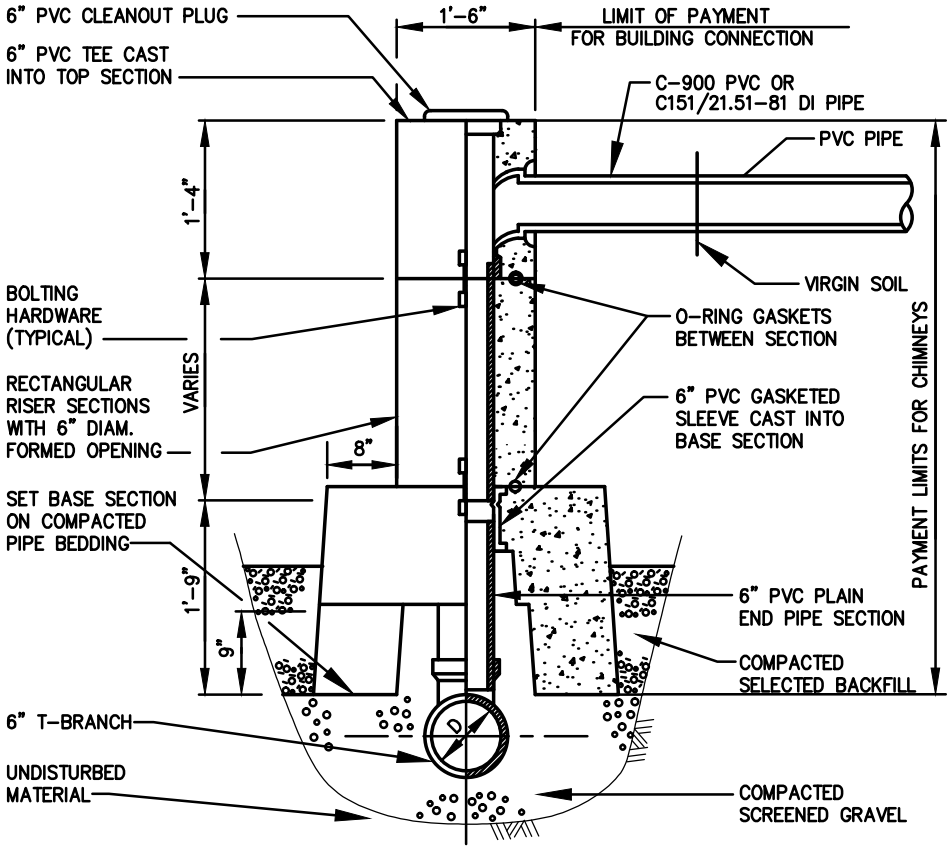

SECTION

DEDHAM DPW
DESIGN & CONSTRUCTION STANDARDS

PRECAST REINFORCED CONCRETE SEWER CHIMNEY

SCALE:	DATE OF ISSUE:
NTS	FEBRUARY 2011
REVISED:	
DETAIL NUMBER: SS.09	

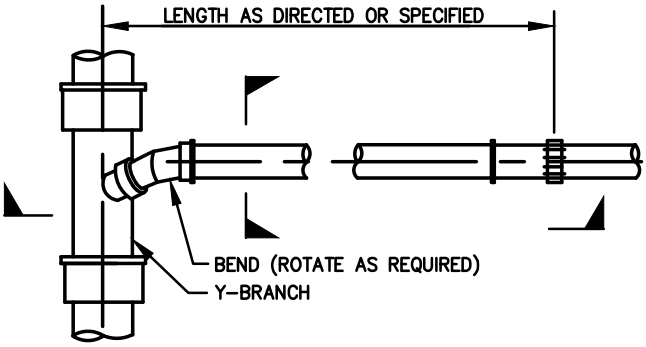

PLAN

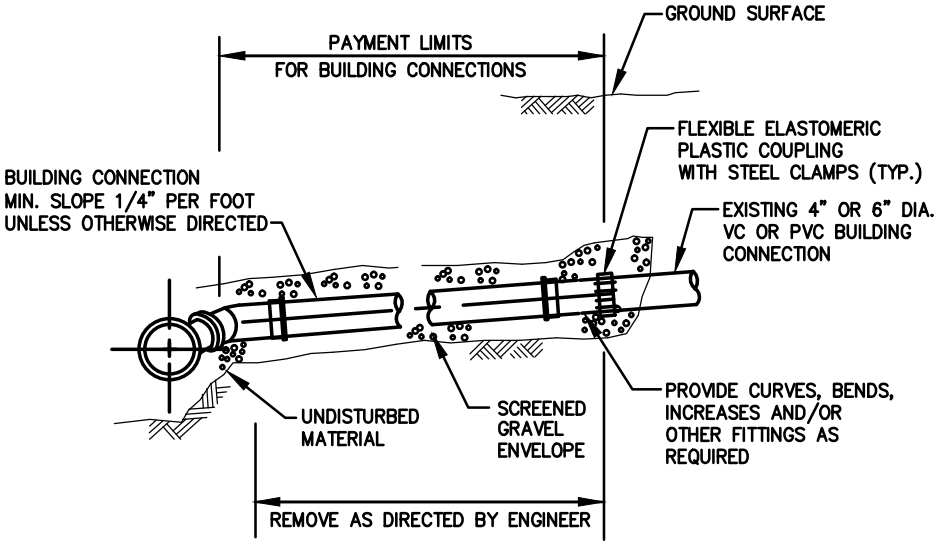

SECTION

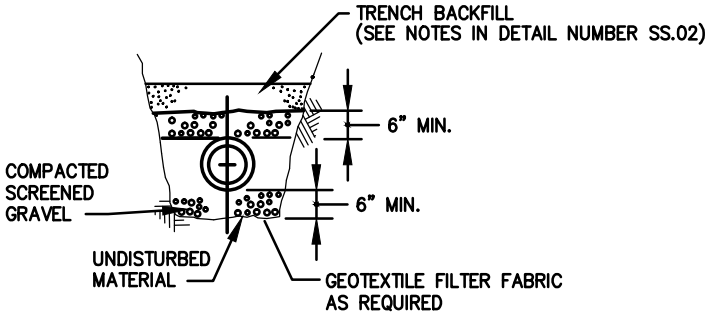

SECTION

	DEDHAM DPW **DESIGN & CONSTRUCTION STANDARDS** RECONSTRUCTED BUILDING CONNECTION	SCALE: NTS	DATE OF ISSUE: FEBRUARY 2011
		REVISED:	
		DETAIL NUMBER: SS.10	

PIPE SIZE TABLE

PIPE SIZES (IN)	
INLET SEWER D_1	DROP PIPE D_2
12	12
10	10
8	8
6	6

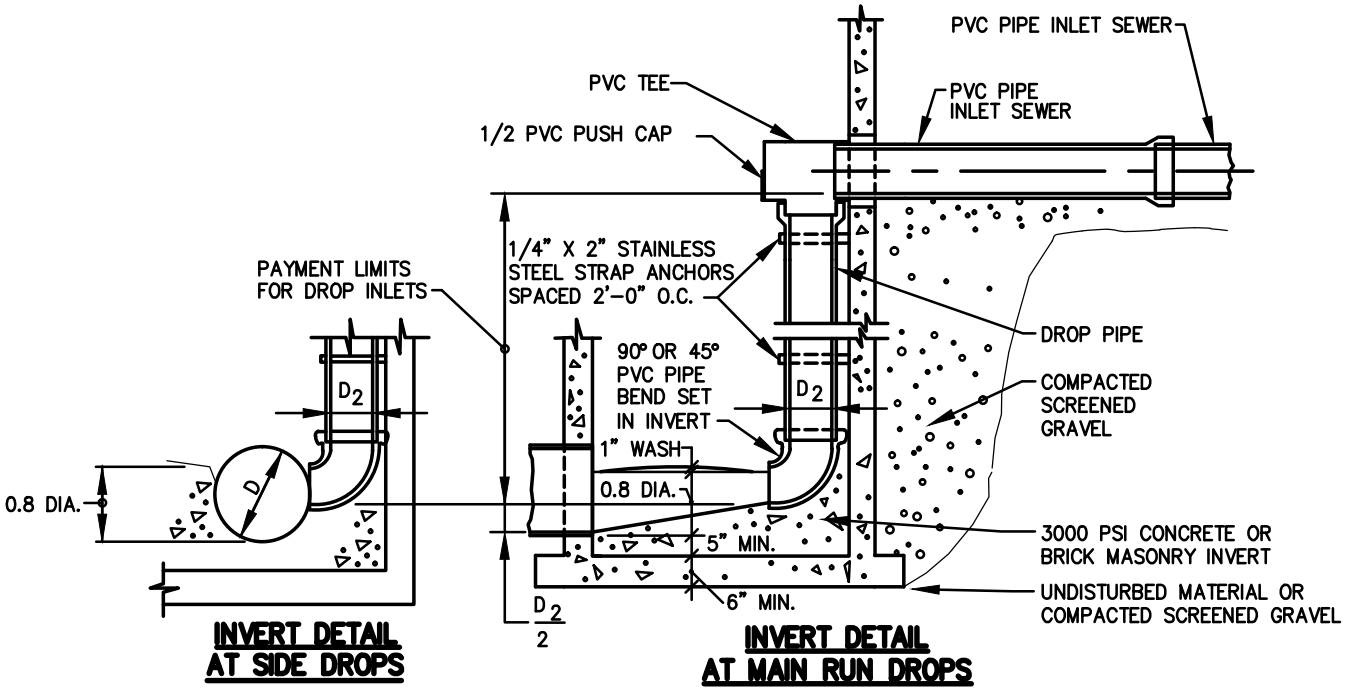

DEDHAM DPW
DESIGN & CONSTRUCTION STANDARDS

INSIDE DROP INLETS FOR PVC PIPE SEWERS
12 INCH DIAMETER AND SMALLER

SCALE: NTS	DATE OF ISSUE: FEBRUARY 2011
REVISED:	
DETAIL NUMBER: SS.11	

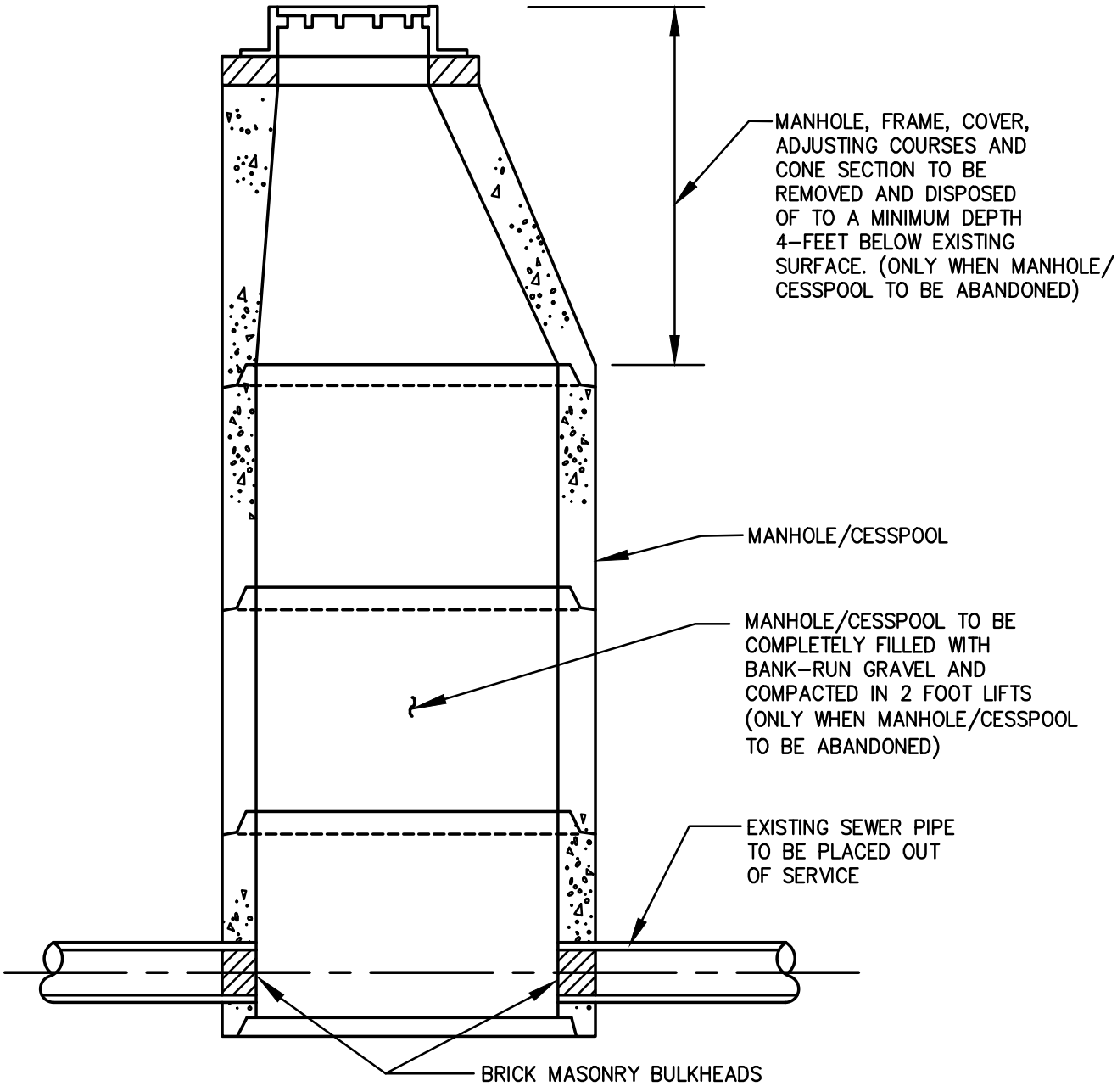

DEDHAM DPW
DESIGN & CONSTRUCTION STANDARDS

ABANDON EXISTING MANHOLES/CESSPOOLS

SCALE:	DATE OF ISSUE:
NTS	FEBRUARY 2011
REVISED:	
DETAIL NUMBER: SS.12	

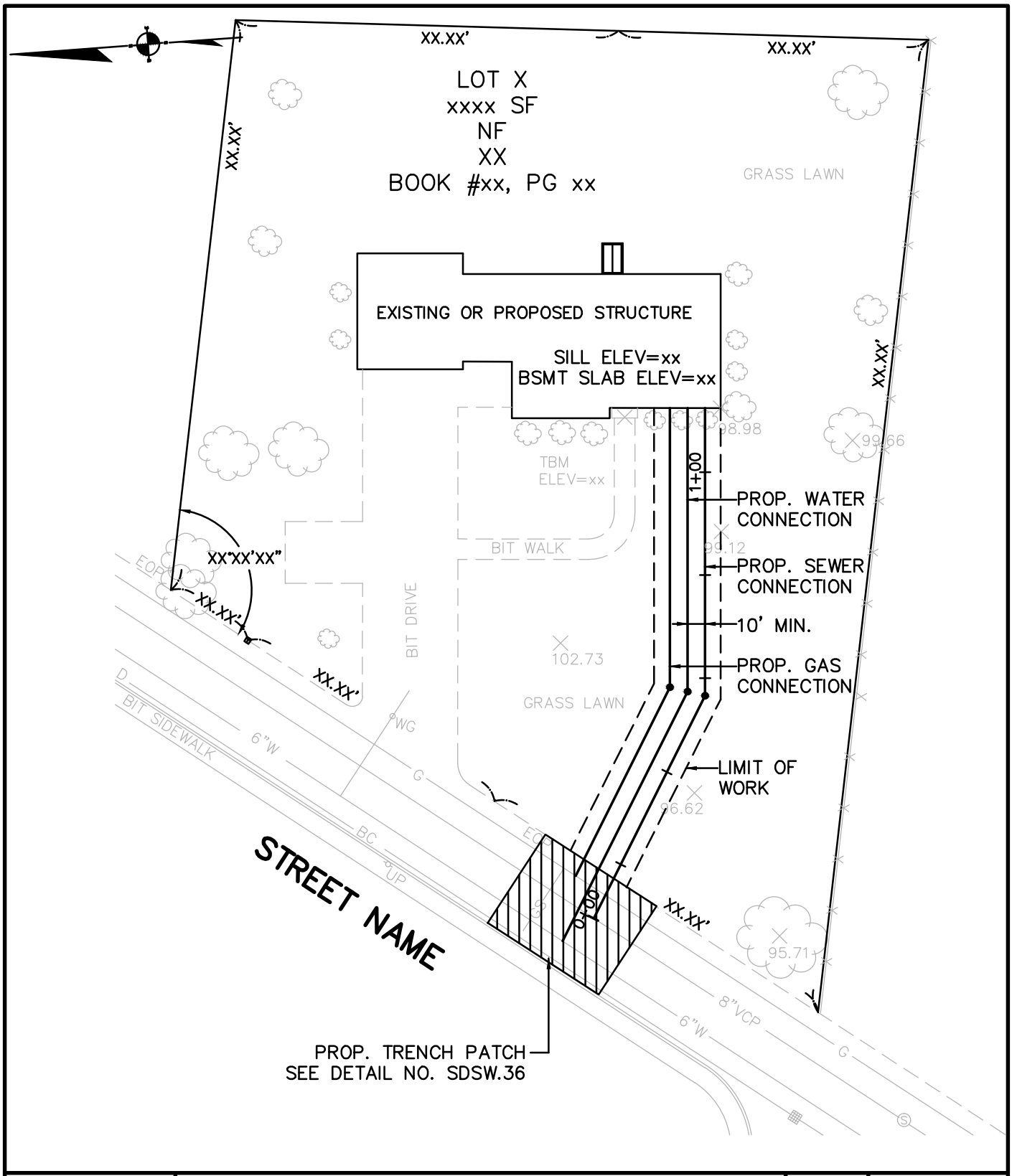

	DEDHAM DPW **DESIGN & CONSTRUCTION STANDARDS** TYPICAL SEWER PLAN	SCALE: NTS	DATE OF ISSUE: FEBRUARY 2011
		REVISED:	
		DETAIL NUMBER: SS.13	

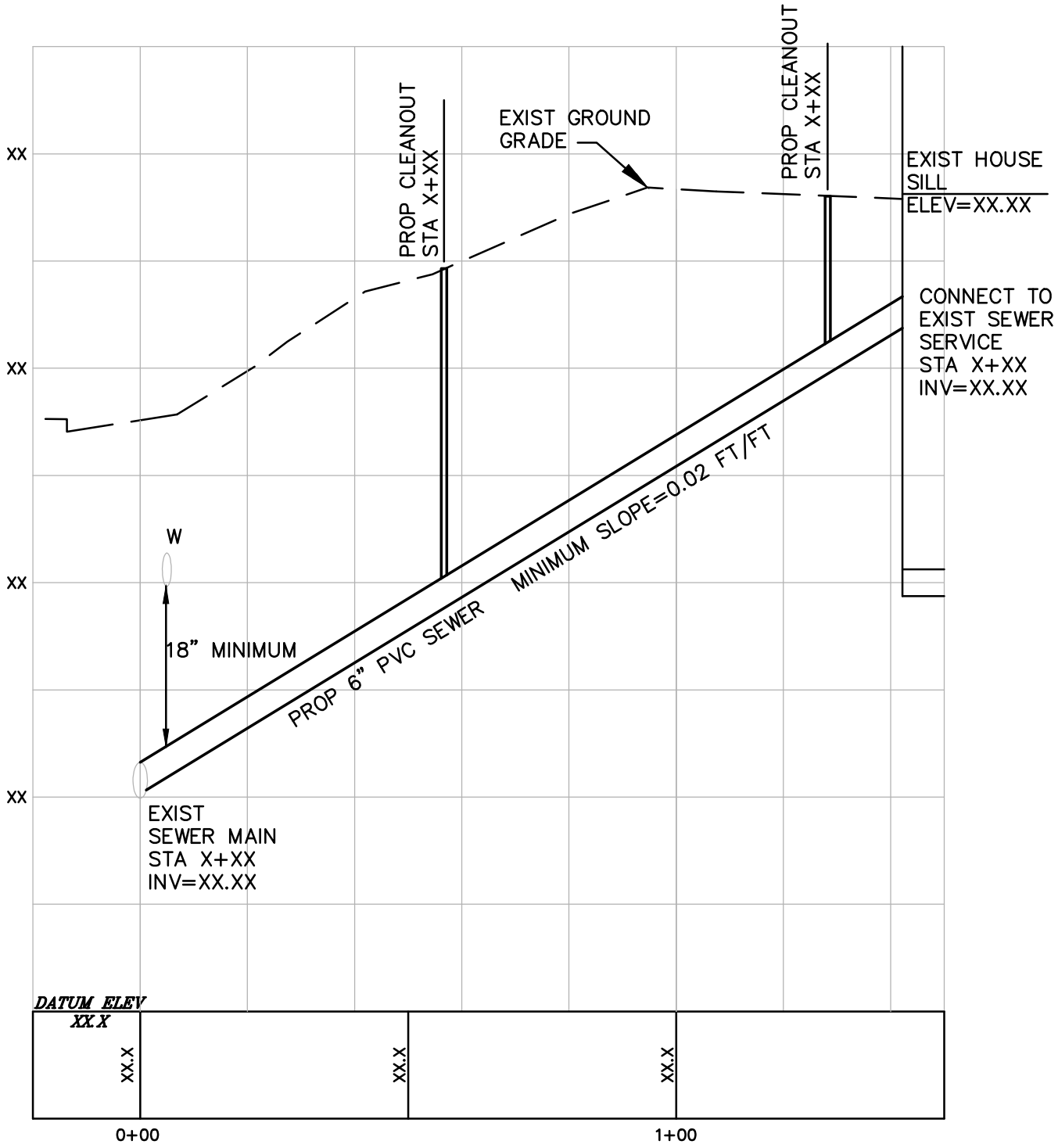

DEDHAM DPW
DESIGN & CONSTRUCTION STANDARDS

TYPICAL SEWER PROFILE

SCALE:	DATE OF ISSUE:
NTS	FEBRUARY 2011
REVISED:	
DETAIL NUMBER: SS.14	

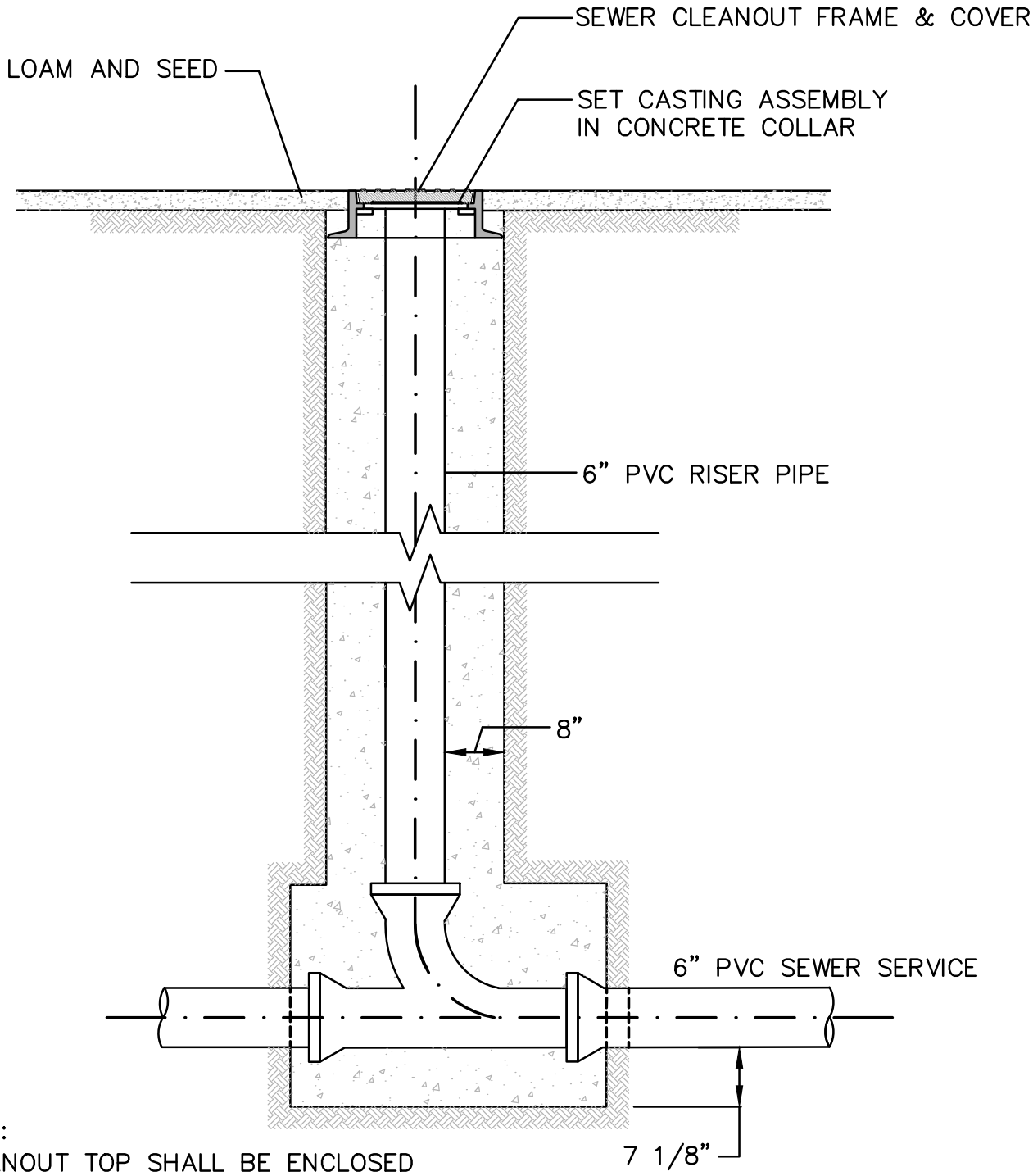

NOTE:
CLEANOUT TOP SHALL BE ENCLOSED IN CASTING AND/OR FABRICATED COVER ASSEMBLY.

DEDHAM DPW
DESIGN & CONSTRUCTION STANDARDS

TYPICAL SEWER CLEANOUT DETAIL

SCALE:	DATE OF ISSUE:
NTS	FEBRUARY 2011
REVISED:	
DETAIL NUMBER: SS.15	

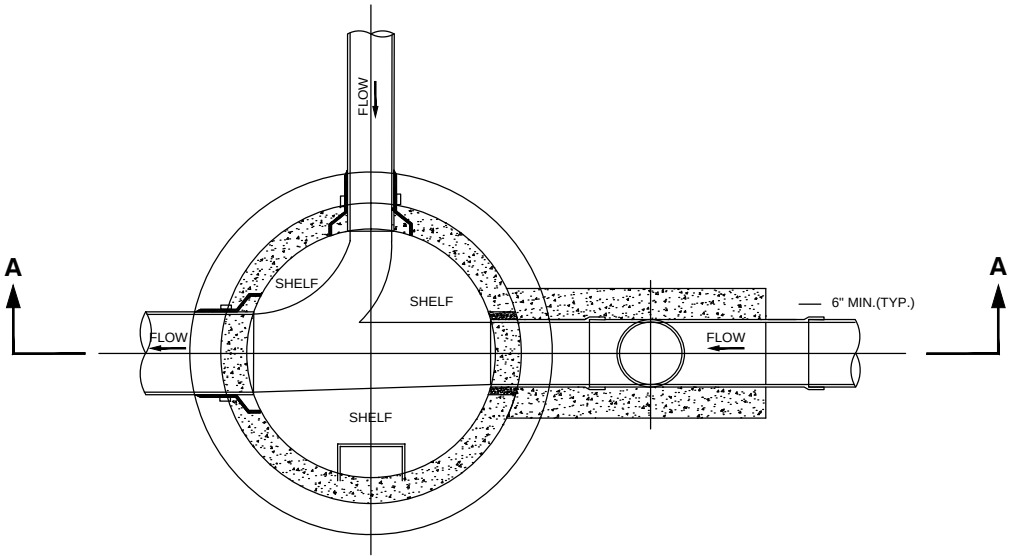

PLAN

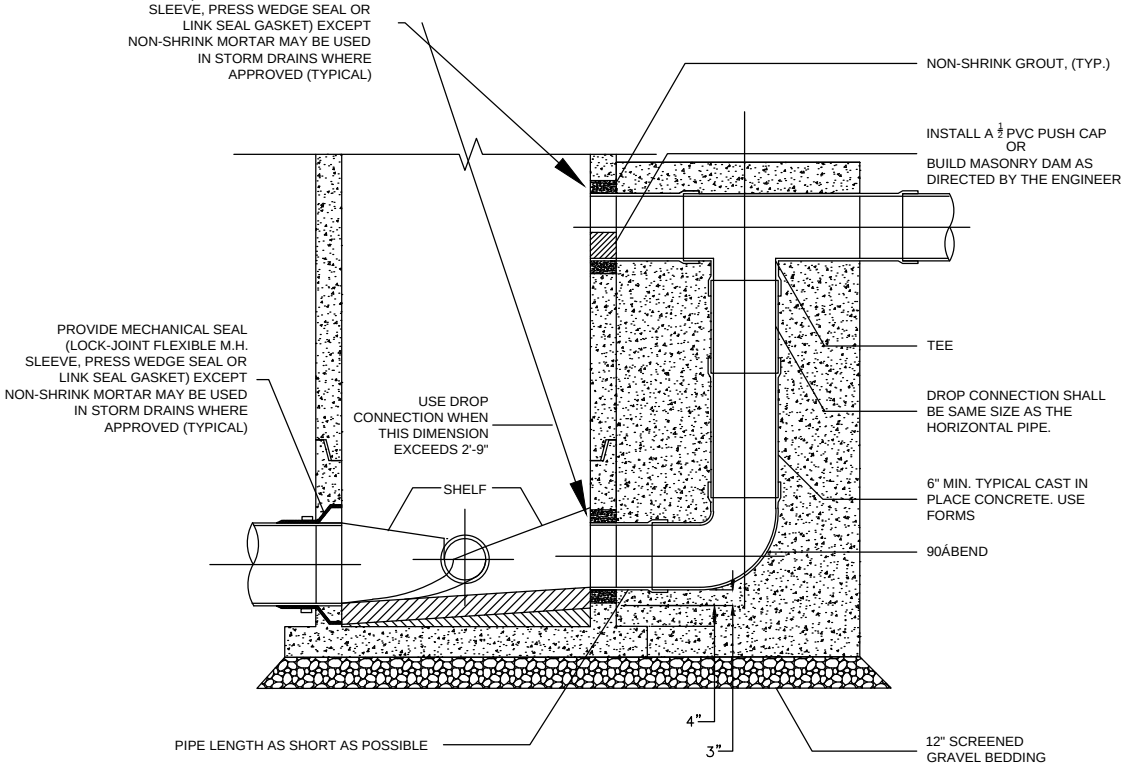

SECTION A - A

DEDHAM DPW
DESIGN & CONSTRUCTION STANDARDS

TYPICAL OUTSIDE DROP MANHOLE DETAIL

SCALE:	DATE OF ISSUE:
NTS	FEBRUARY 2011
REVISED:	
DETAIL NUMBER: SS.16	

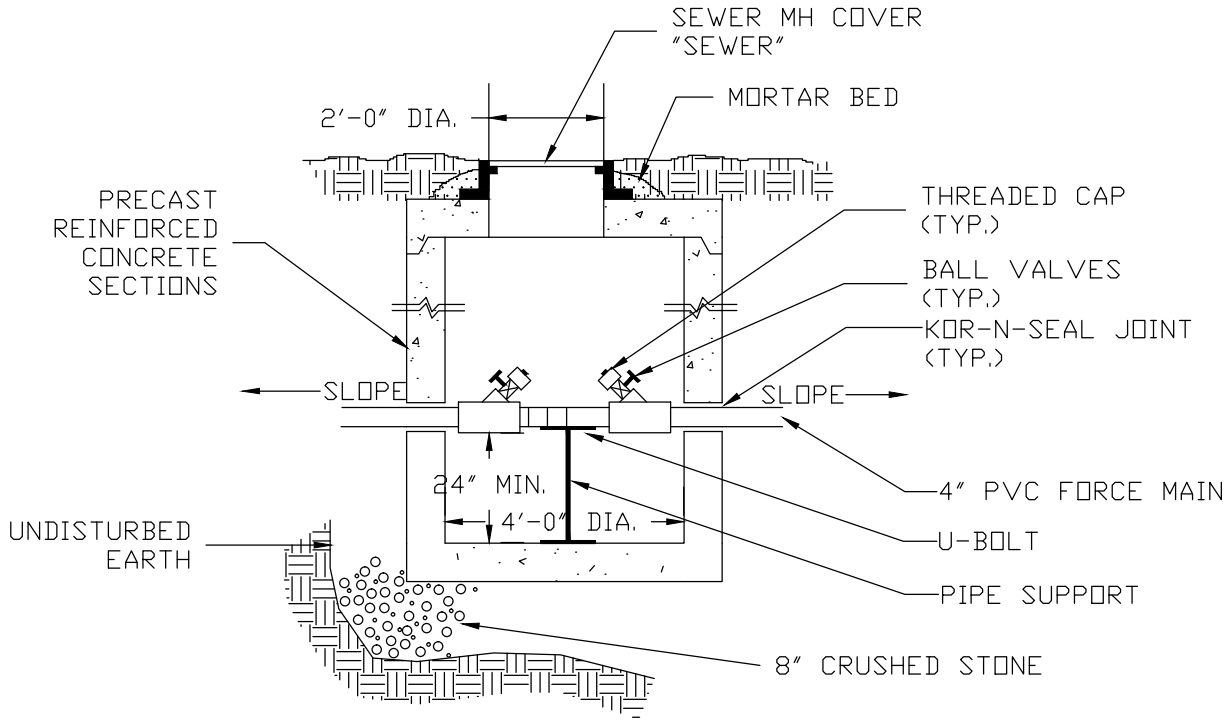

SECTION

NOTES:

1.) PROVIDE MANHOLE STEPS
1' - 0" O.C.

2.) CONTRACTOR SHALL CONFIRM ELEVATION AND ALIGNMENT OF PROPOSED FORCE MAIN AND GROUND SURFACE AT EACH MANHOLE PRIOR TO ORDERING SECTION

	DEDHAM DPW **DESIGN & CONSTRUCTION STANDARDS** FORCE MAIN CLEANOUT MANHOLE DETAIL	SCALE: NTS	DATE OF ISSUE: FEBRUARY 2011
		REVISED:	
		DETAIL NUMBER: SS.17	

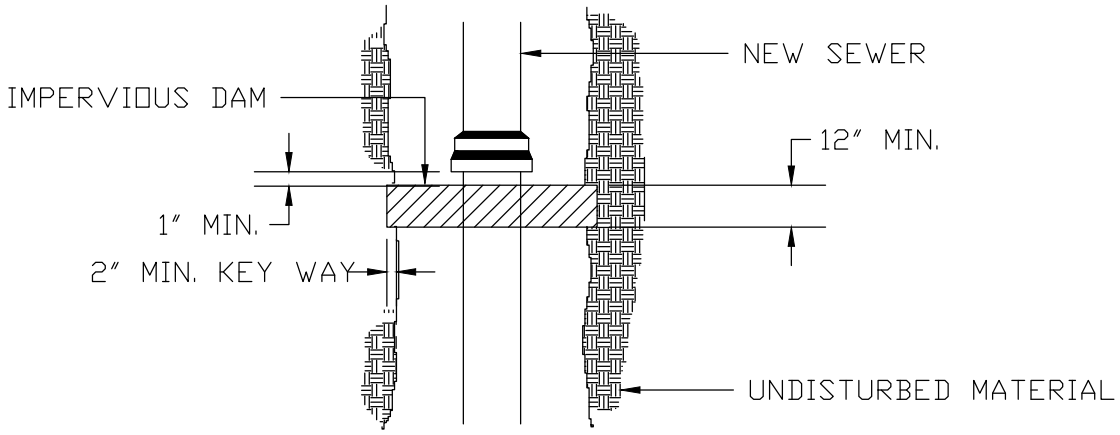

PLAN

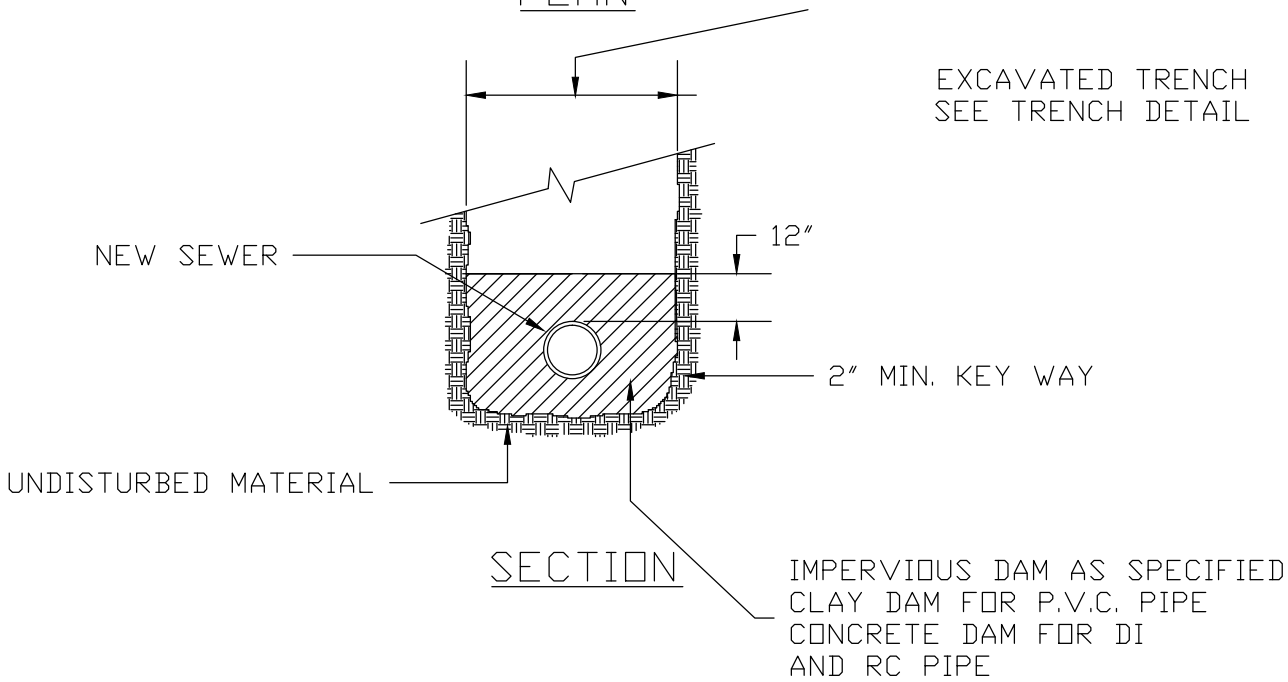

SECTION

	DEDHAM DPW **DESIGN & CONSTRUCTION STANDARDS** PIPE TRENCH DAM DETAIL	SCALE: NTS	DATE OF ISSUE: FEBRUARY 2011
		REVISED:	
		DETAIL NUMBER: SS.18	

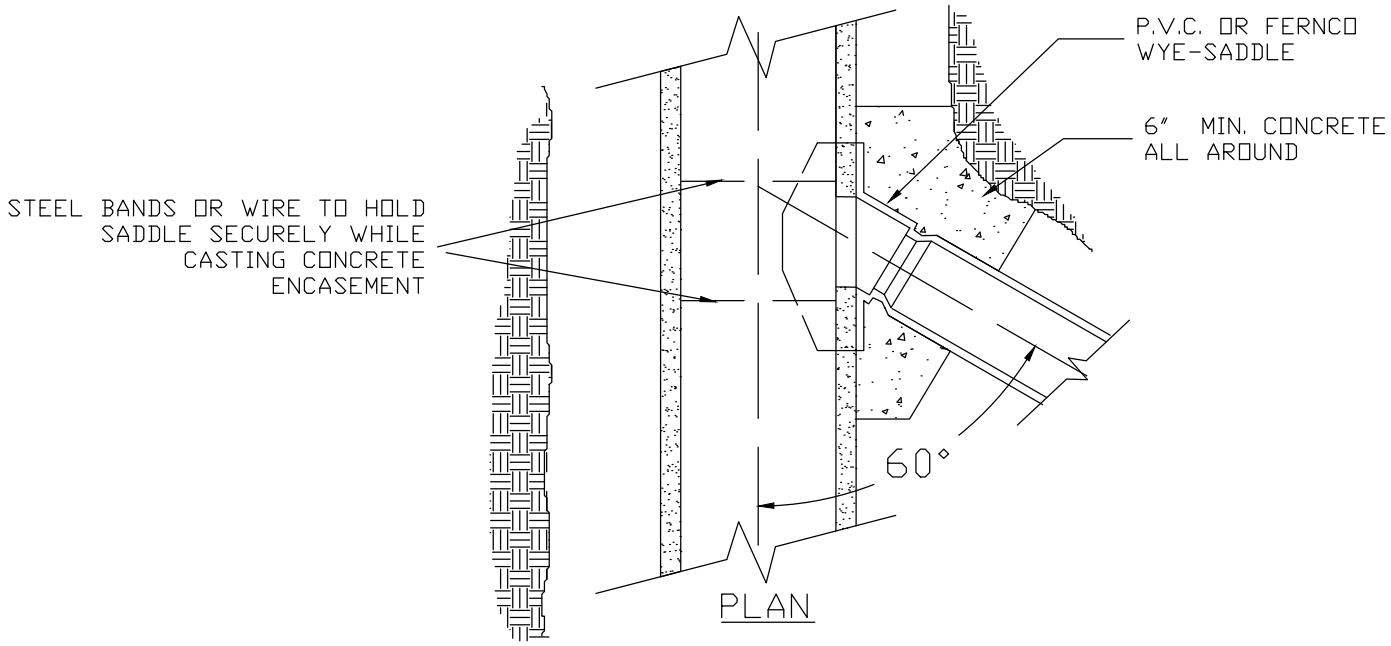

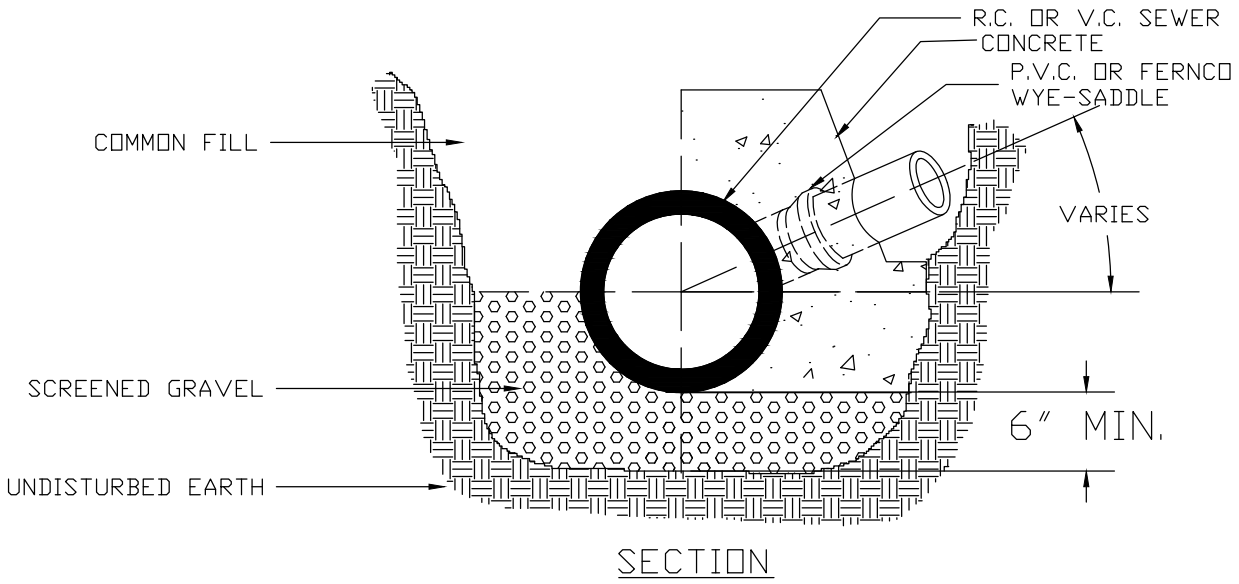

DEDHAM DPW
DESIGN & CONSTRUCTION STANDARDS

WYE-SADDLE DETAIL FOR R.C. OR V.C.
PIPE SERVICE CONNECTION

SCALE:	DATE OF ISSUE:
NTS	FEBRUARY 2011
REVISED:	
DETAIL NUMBER: SS.19	

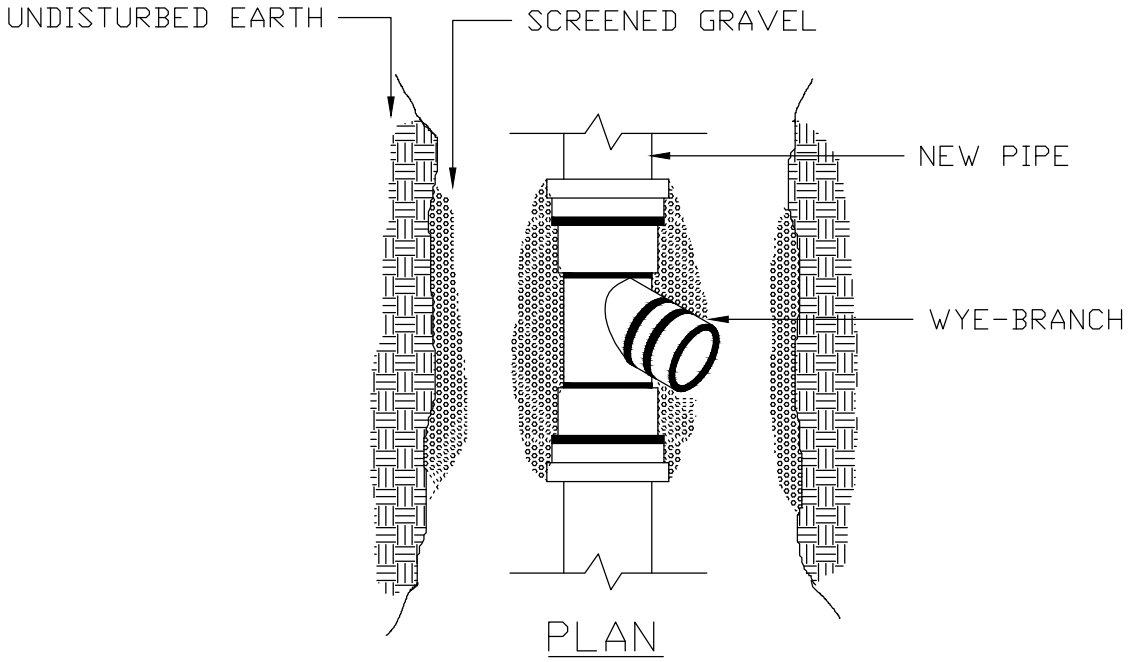

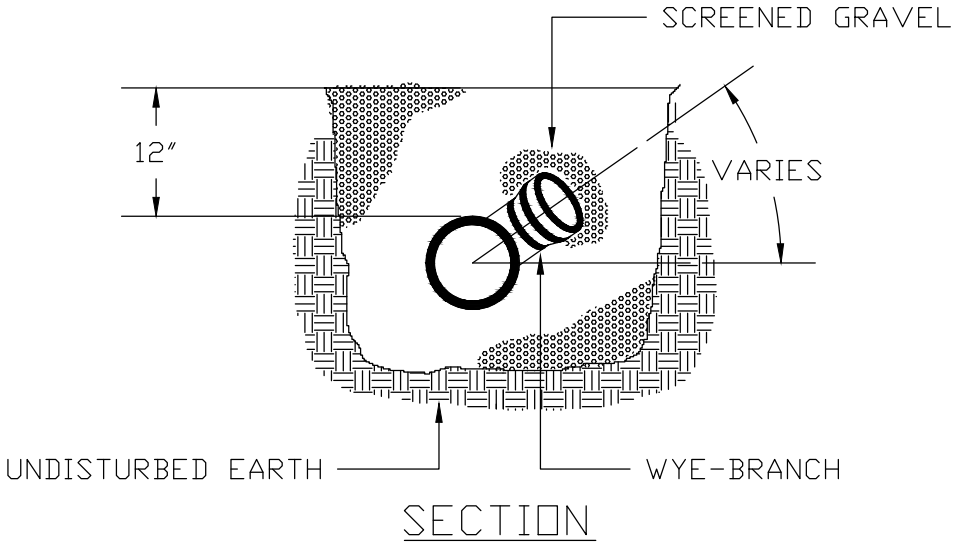

DEDHAM DPW
DESIGN & CONSTRUCTION STANDARDS

P.V.C. WYE-BRANCH DETAIL

SCALE:	DATE OF ISSUE:
NTS	FEBRUARY 2011
REVISED:	
DETAIL NUMBER: SS.20	

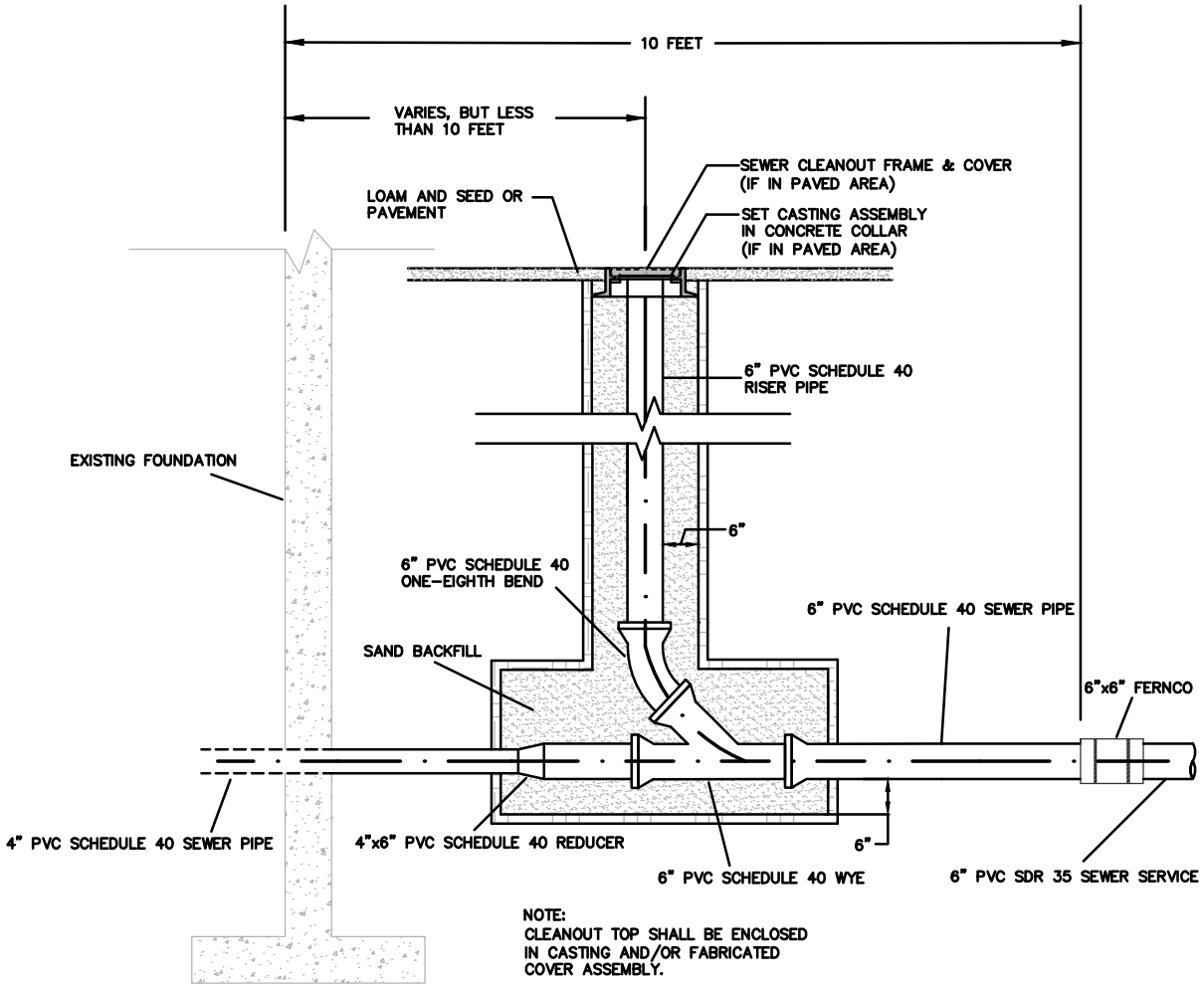

NOTES:

1. SEWER CLEANOUTS SHALL BE TYPICALLY LOCATED A MINIMUM OF 10' FROM THE FOUNDATION. HOWEVER, IN SPECIAL CIRCUMSTANCES THE CLEANOUT MAY BE LOCATED WITHIN 10' OF THE FOUNDATION WITH PERMISSION OF THE ENGINEERING DEPARTMENT. THE 10' ZONE SHALL BE CONSIDERED THE DISTANCE FROM THE INSIDE FACE OF THE FOUNDATION TO A DISTANCE OF 10' OUTSIDE OF THE FOUNDATION, PERPENDICULAR TO THE INSIDE FACE OF THE FOUNDATION.

2. ALL WORK TO BE CONDUCTED WITHIN THE 10' ZONE SHALL BE PERFORMED BY A PLUMBER LICENSED IN THE STATE OF MASSACHUSETTS AND SHALL CONFORM TO 248 CMR 2.00 AND 248 CMR 10.00.

	DEDHAM DPW **DESIGN & CONSTRUCTION STANDARDS** TYPICAL SEWER CLEANOUT DETAIL WITHIN 10' OF BUILDING FOUNDATION	SCALE: NTS	DATE OF ISSUE: FEBRUARY 2011
		REVISED:	
		DETAIL NUMBER: SS.21	

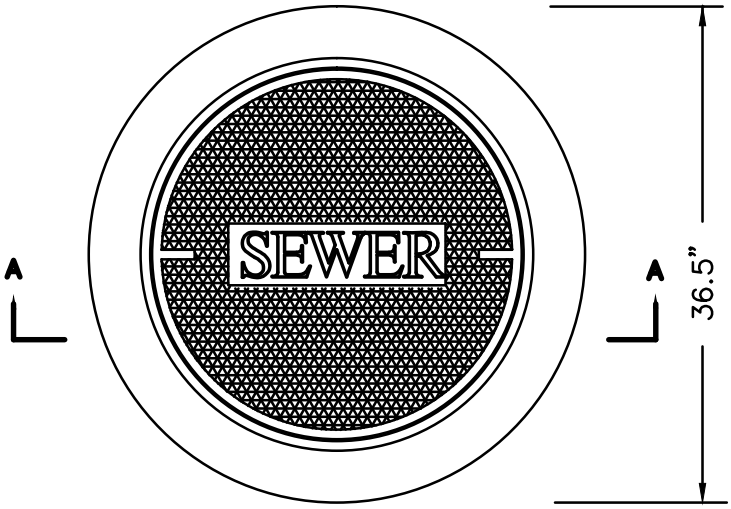

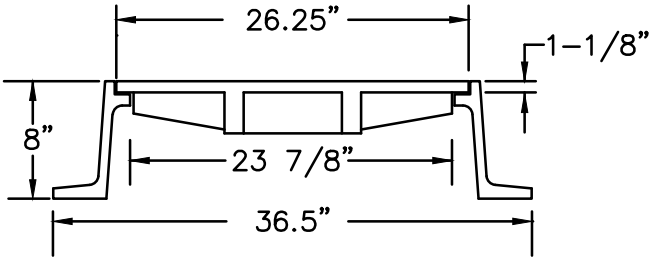

SECTION A-A

NOTE:

FRAME AND COVER SHALL BE EAST JORDAN IRON WORKS CATALOG NOS. 2110A & 2114Z MARKED "SEWER", OR APPROVED EQUAL.

	DEDHAM DPW **DESIGN & CONSTRUCTION STANDARDS** MANHOLE FRAME & COVER MARKED SEWER	SCALE: NTS	DATE OF ISSUE: FEBRUARY 2011
		REVISED:	
		DETAIL NUMBER: SS.22	

MISCELLANEOUS

DESCRIPTION	DETAIL NUMBER
PARKING METER POST INSTALLATION	MISC.01
SIGN POST INSTALLATION	MISC.02
GRANITE BOUND AND COVER	MISC.03
CONCRETE BOUND AND COVER	MISC.04
TOWN STREET SIGNS	MISC.05
TOWN STREET SIGN INSTALLATION	MISC.06
CHAIN LINK FENCES (VARIOUS HEIGHTS)	MISC.07
HYDRANT & TAPPING SLEEVE VALVE	MISC.08
HYDRANT RELOCATION	MISC.09
STANDARD ANCHOR BASE LIGHT POLE	MISC.10

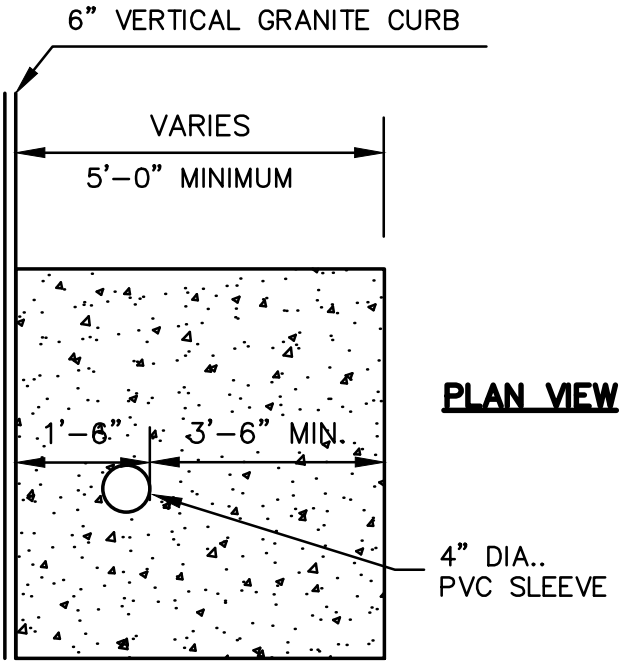

PLAN VIEW

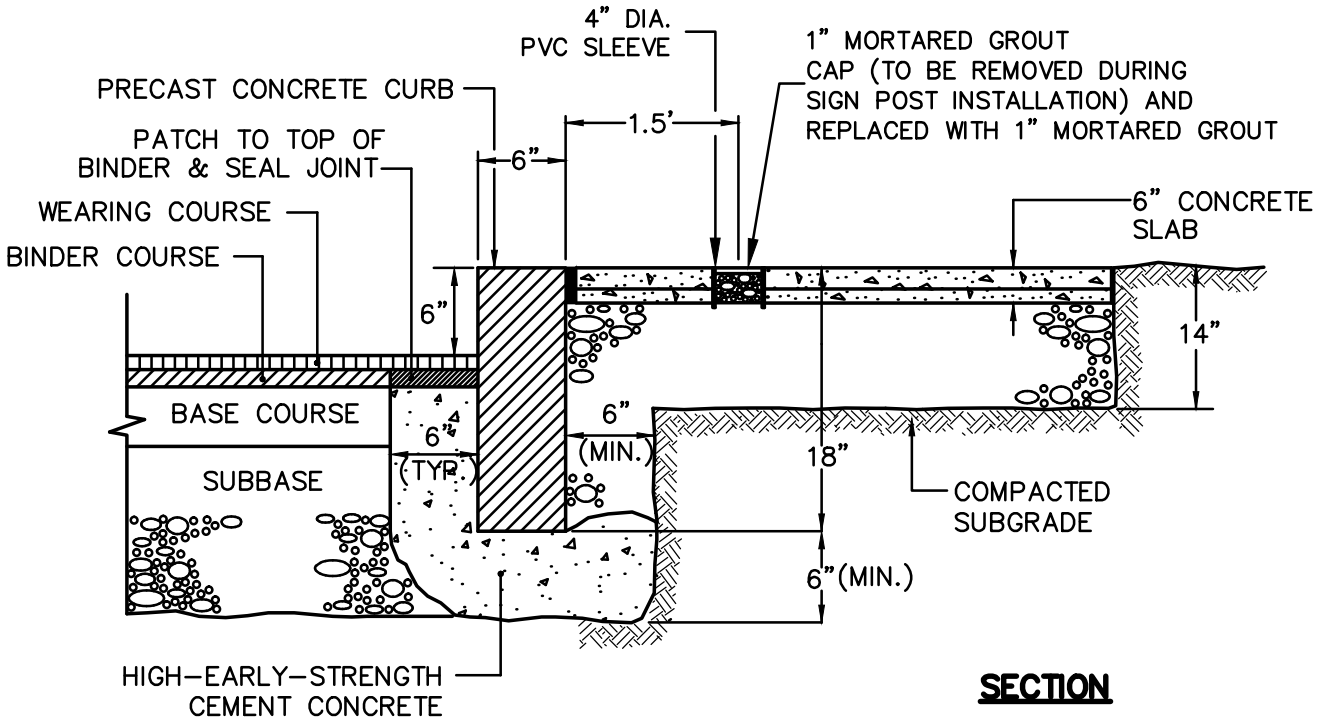

SECTION

	DEDHAM DPW **DESIGN & CONSTRUCTION STANDARDS** PARKING METER POST INSTALLATION	SCALE: NTS	DATE OF ISSUE: FEBRUARY 2011
		REVISED:	
		DETAIL NUMBER: MISC.01	

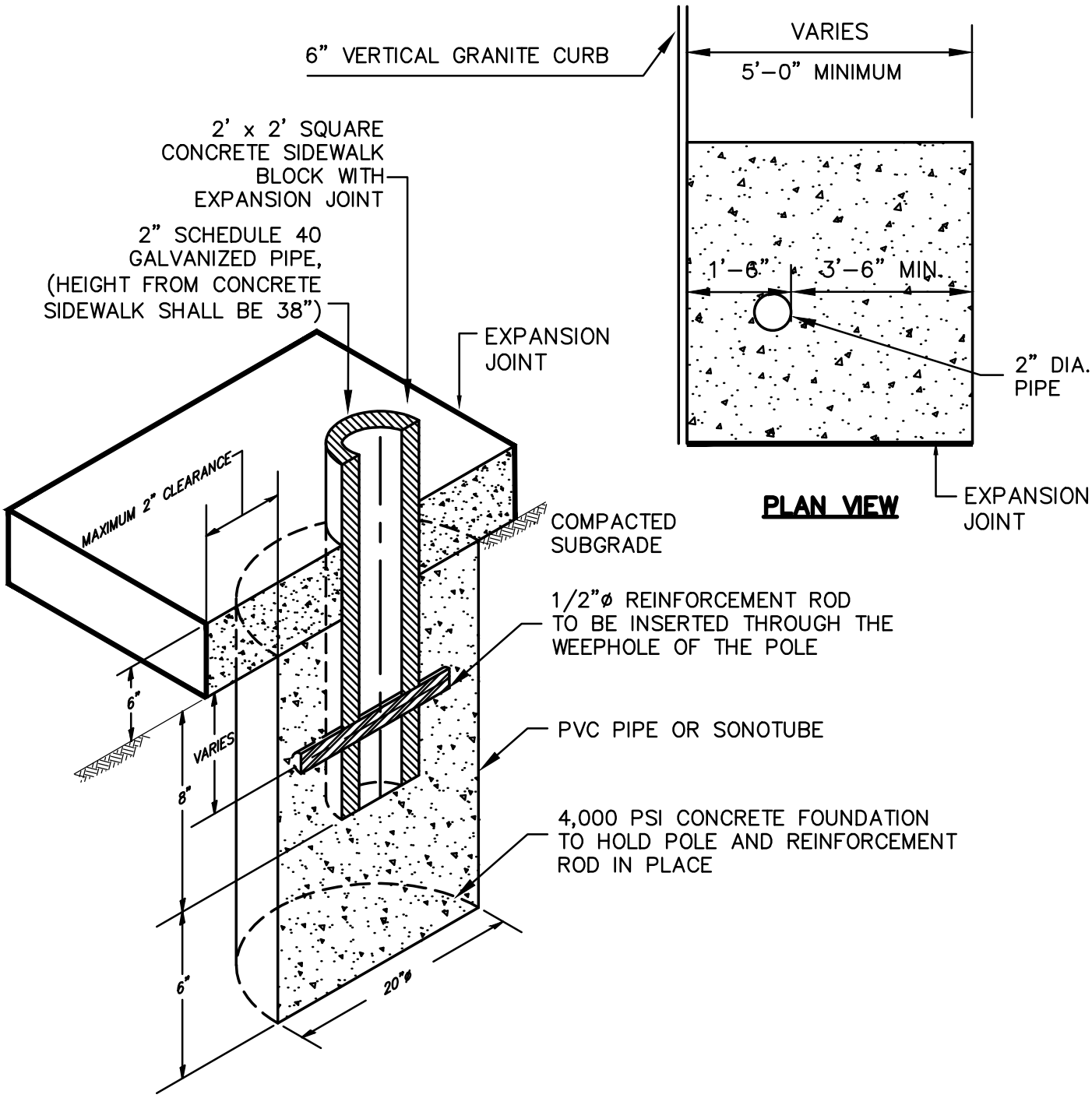

DEDHAM DPW
DESIGN & CONSTRUCTION STANDARDS

SIGN POST INSTALLATION

SCALE:	DATE OF ISSUE:
NTS	FEBRUARY 2011
REVISED:	
DETAIL NUMBER: MISC.02	

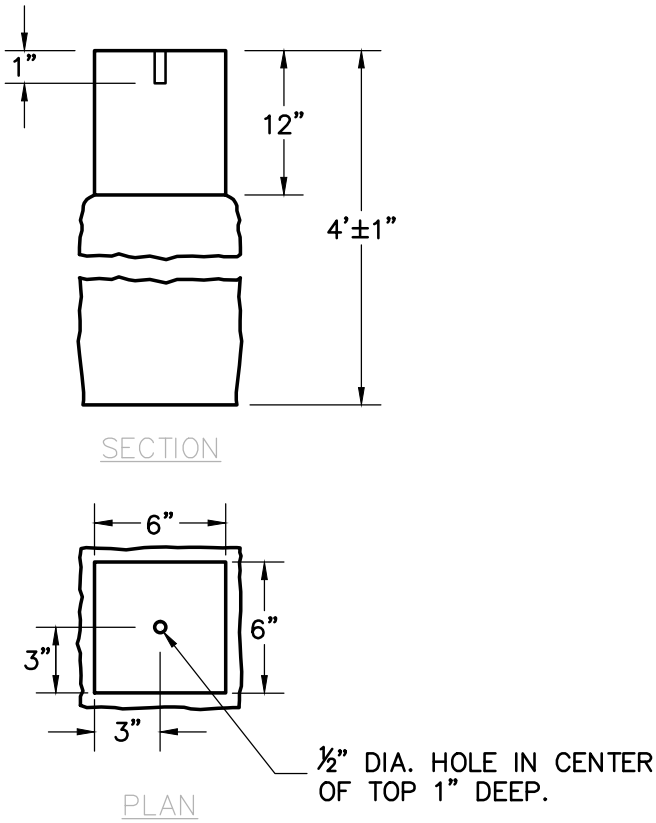

GRANITE BOUND

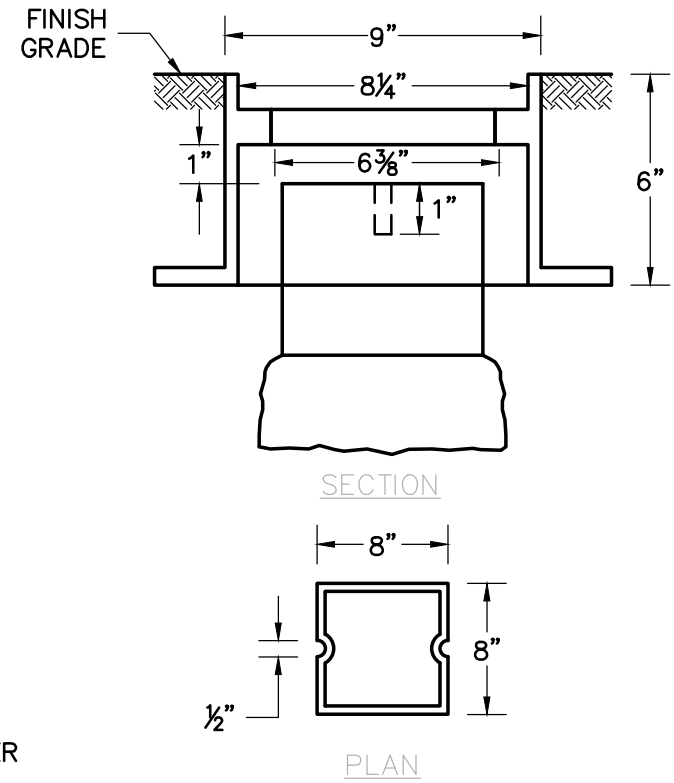

CAST IRON GRANITE BOUND COVER

NOTES:

1. BOUNDS TO BE LOCATED IN LAWNS, SIDEWALKS OR DRIVES SHALL BE SET WITH THE TOP OF BOUND 2" BELOW GROUND SURFACE.
2. ALL BOUNDS SHALL BE SET AT THE DIRECTION OF ENGINEER. PRIOR TO COMMENCING THE WORK, THE CONTRACTOR SHALL NOTIFY THE ENGINEER.
3. ALL BOUNDS SHALL HAVE A LEBARON STONE BOUND FRAME AND COVER NO. S208–6, OR APPROVED EQUAL (SEE DETAIL).
4. THE TOP 12" OF THE BOUND IS TO BE MACHINE FINISHED.
5. ALL BOUNDS SHALL BE SET BY A REGISTERED LAND SURVEYOR IN THE COMMONWEALTH OF MASSACHUSETTS AND TIED TO NAD83 AND NAVD88 DATUMS.
6. ALL BOUNDS SHALL BE EMBEDDED BELOW GROUND SURFACE A MINIMUM OF 4'–0".

UNLESS OTHERWISE NOTED, CONSTRUCTION METHODS, MATERIAL REQUIREMENTS AND METHOD OF MEASUREMENT SHALL BE IN ACCORDANCE WITH THE LATEST EDITION OF THE MASSACHUSETTS DEPARTMENT OF TRANSPORTATION (MASS DOT) STANDARD SPECIFICATIONS.

ALSO REFERENCE CURRENT MASS DOT CONSTRUCTION AND TRAFFIC STANDARD DETAILS.

	DEDHAM DPW **DESIGN & CONSTRUCTION STANDARDS** GRANITE BOUND AND COVER	SCALE: NTS	DATE OF ISSUE: FEBRUARY 2011
		REVISED:	
		DETAIL NUMBER: MISC.03	

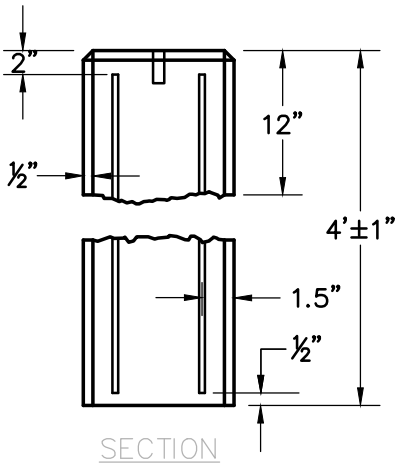

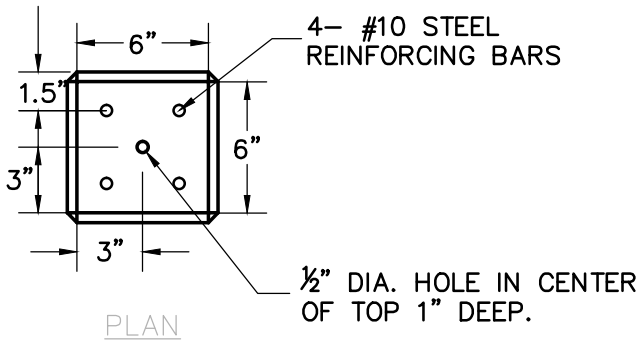

CONCRETE BOUND

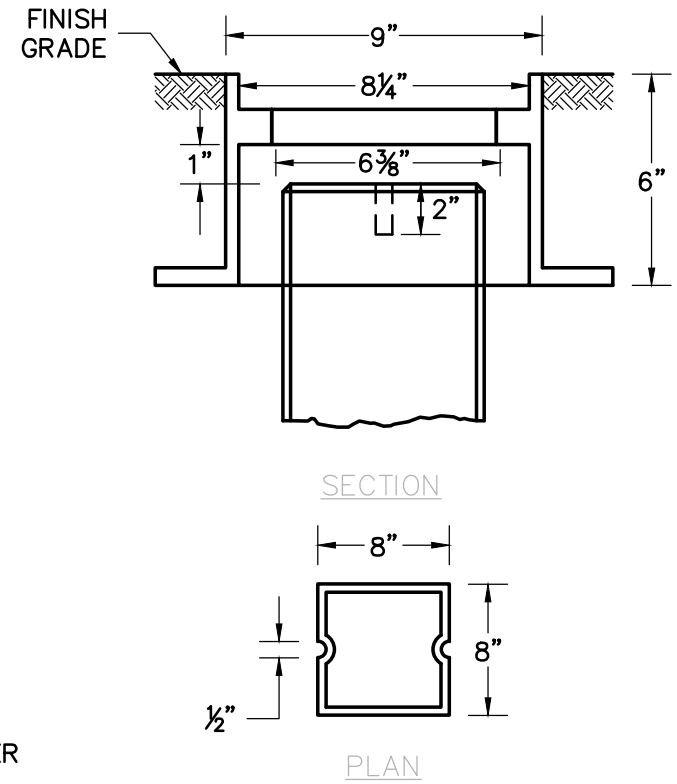

CAST IRON CONCRETE BOUND COVER

NOTES:

1. BOUNDS TO BE LOCATED IN LAWNS, SIDEWALKS OR DRIVES SHALL BE SET WITH THE TOP OF BOUND 2" BELOW GROUND SURFACE.
2. ALL BOUNDS SHALL BE SET AT THE DIRECTION OF ENGINEER. PRIOR TO COMMENCING THE WORK, THE CONTRACTOR SHALL NOTIFY THE ENGINEER.
3. ALL BOUNDS SHALL HAVE A LEBARON STONE BOUND FRAME AND COVER NO. S208–6, OR APPROVED EQUAL (SEE DETAIL).
4. ALL BOUNDS SHALL BE SET BY A REGISTERED LAND SURVEYOR IN THE COMMONWEALTH OF MASSACHUSETTS AND TIED TO NAD83 AND NAVD88 DATUMS.
5. ALL BOUNDS SHALL BE EMBEDDED BELOW GROUND SURFACEA MINIMUM OF 4'–0".

UNLESS OTHERWISE NOTED, CONSTRUCTION METHODS, MATERIAL REQUIREMENTS AND METHOD OF MEASUREMENT SHALL BE IN ACCORDANCE WITH THE LATEST EDITION OF THE MASSACHUSETTS DEPARTMENT OF TRANSPORTATION (MASS DOT) STANDARD SPECIFICATIONS.

ALSO REFERENCE CURRENT MASS DOT CONSTRUCTION AND TRAFFIC STANDARD DETAILS.

	DEDHAM DPW **DESIGN & CONSTRUCTION STANDARDS** CONCRETE BOUND AND COVER	SCALE: NTS	DATE OF ISSUE: FEBRUARY 2011
		REVISED:	
		DETAIL NUMBER: MISC.04	

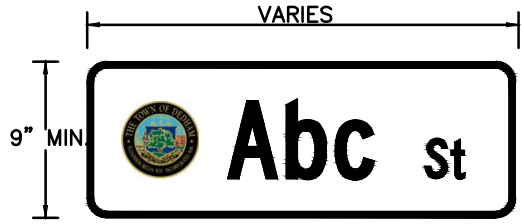

MAIN STREET – GREEN BACKGROUND WITH WHITE LETTERING
& TOWN SEAL (6" DIA.) ON LEFT SIDE (TO BE USED ON MAIN ROADS, SIGNALIZED INTERSECTIONS OR OTHER ROADS AS DIRECTED BY THE DPW DIRECTOR).

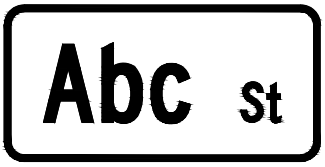

PUBLIC WAY MINOR STREET – GREEN BACKGROUND WITH WHITE LETTERING

PRIVATE WAY – BLUE BACKGROUND WITH WHITE LETTERING

PRIVATE DRIVE – BROWN BACKGROUND WITH WHITE LETTERING

NOTES:

1. LETTERING ON SIGNS SHOULD CONSIST OF HIGHWAY B (MIN.) LETTERING WITH INITIAL UPPER–CASE LETTERS AT LEAST 6" IN HEIGHT AND LOWER–CASE LETTERS AT LEAST 4.5" IN HEIGHT.
2. SUPPLEMENTARY LETTERING (i.e. St, Rd, Dr..etc) SHOULD CONSIST OF HIGHWAY B LETTERING WITH INITIAL UPPER–CASE LETTERS AT LEAST 3" IN HEIGHT AND LOWER–CASE LETTERS AT LEAST 2.25" IN HEIGHT.
3. ABBREVIATIONS FOR PRIVATE WAYS (PVT WAY) AND PRIVATE DRIVES (PVT DR) SHOULD CONSIST OF HIGHWAY B LETTERING ALL IN UPPER–CASE LETTERS AT LEAST 3" IN HEIGHT.
4. LETTER SPACING SHOULD BE IN CONFORMANCE WITH THE LATEST EDITION OF THE M.U.T.C.D.

UNLESS OTHERWISE NOTED, CONSTRUCTION METHODS, MATERIAL REQUIREMENTS AND METHOD OF MEASUREMENT SHALL BE IN ACCORDANCE WITH THE LATEST EDITION OF THE MASSACHUSETTS DEPARTMENT OF TRANSPORTATION (MASS DOT) STANDARD SPECIFICATIONS.

ALSO REFERENCE CURRENT MASS DOT CONSTRUCTION AND TRAFFIC STANDARD DETAILS.

DEDHAM DPW
DESIGN & CONSTRUCTION STANDARDS

TOWN STREET SIGNS

SCALE:	DATE OF ISSUE:
NTS	FEBRUARY 2011
REVISED:	
DETAIL NUMBER: MISC.05	

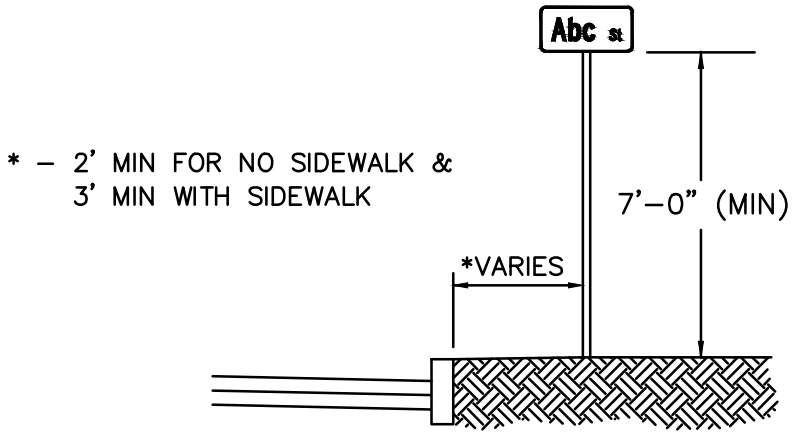

SIGN INSTALLATION

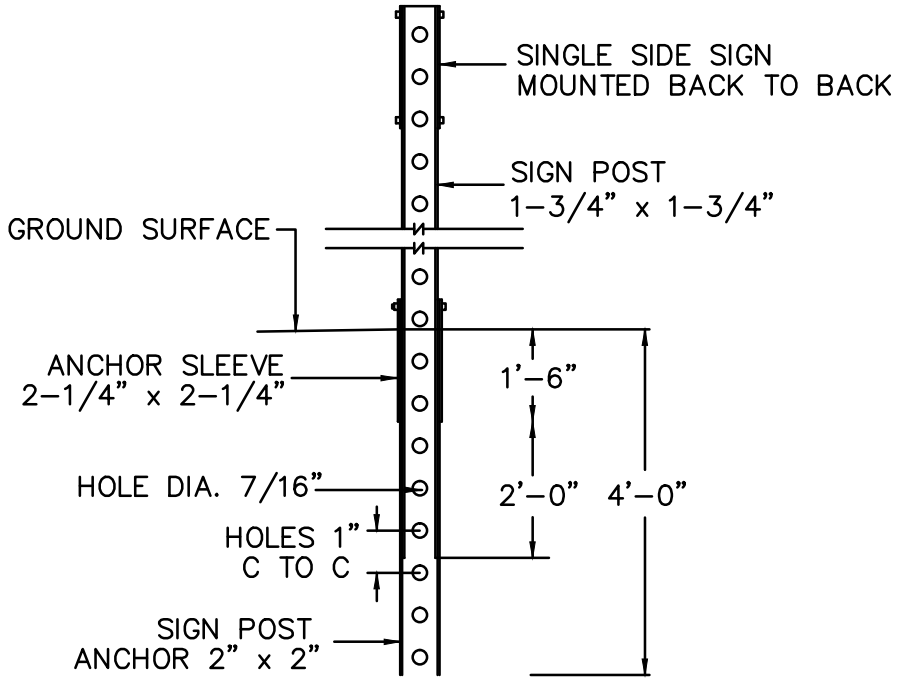

P–5 TELESCOPIC POST

UNLESS OTHERWISE NOTED, CONSTRUCTION METHODS, MATERIAL REQUIREMENTS AND METHOD OF MEASUREMENT SHALL BE IN ACCORDANCE WITH THE LATEST EDITION OF THE MASSACHUSETTS DEPARTMENT OF TRANSPORTATION (MASS DOT) STANDARD SPECIFICATIONS.

ALSO REFERENCE CURRENT MASS DOT CONSTRUCTION AND TRAFFIC STANDARD DETAILS.

	DEDHAM DPW **DESIGN & CONSTRUCTION STANDARDS** TOWN STREET SIGN INSTALLATION	SCALE: NTS	DATE OF ISSUE: FEBRUARY 2011
		REVISED:	
		DETAIL NUMBER: MISC.06	

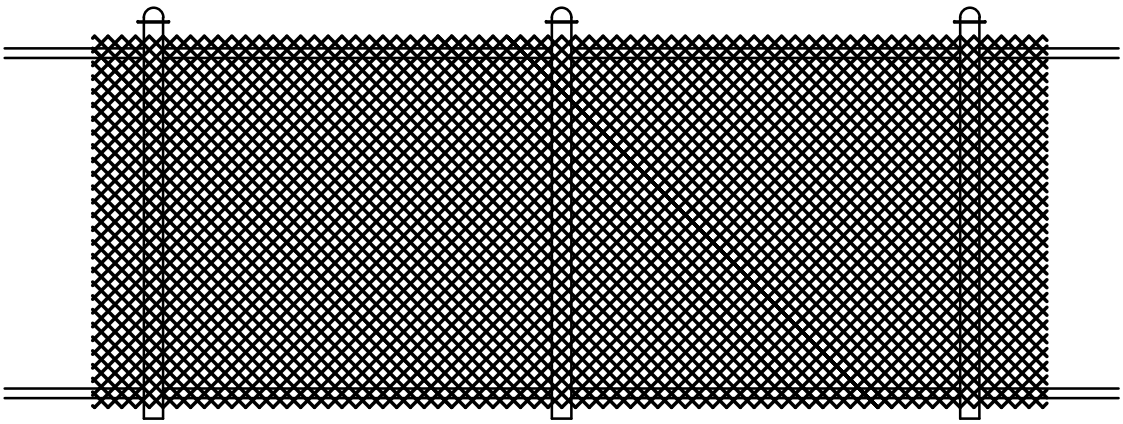

NOTES:

1. ALL CHAIN LINK FENCING MATERIAL SHALL BE BLACK VINYL COATED UNLESS OTHERWISE SPECIFIED.

UNLESS OTHERWISE NOTED, CONSTRUCTION METHODS, MATERIAL REQUIREMENTS AND METHOD OF MEASUREMENT SHALL BE IN ACCORDANCE WITH THE LATEST EDITION OF THE MASSACHUSETTS DEPARTMENT OF TRANSPORTATION (MASS DOT) STANDARD SPECIFICATIONS.

ALSO REFERENCE CURRENT MASS DOT CONSTRUCTION AND TRAFFIC STANDARD DETAILS.

DEDHAM DPW
DESIGN & CONSTRUCTION STANDARDS

CHAIN LINK FENCE
VARIOUS HEIGHTS

SCALE:	DATE OF ISSUE:
NTS	FEBRUARY 2011
REVISED:	
DETAIL NUMBER: MISC.07	

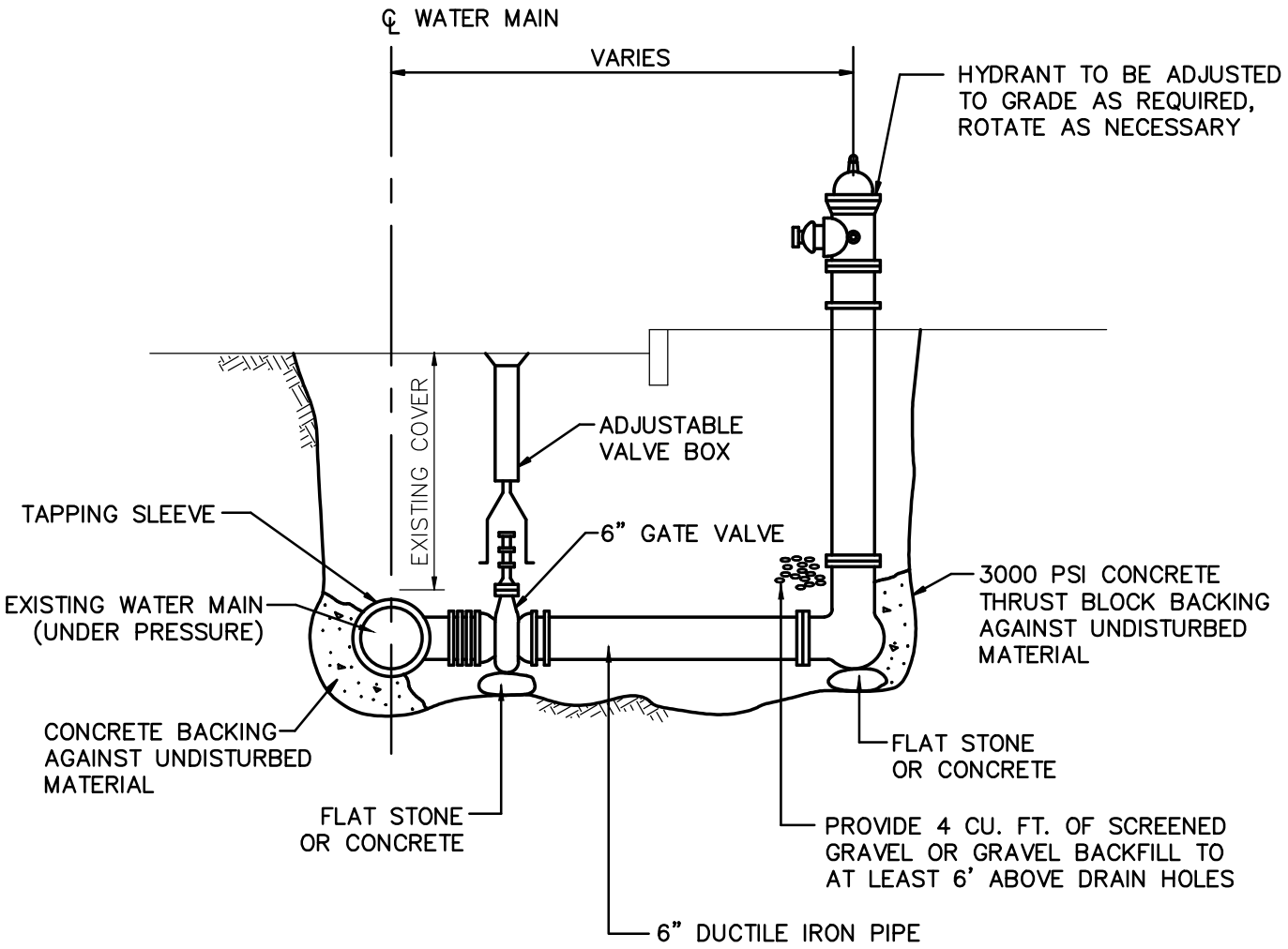

NOTE: ALL WATER GATES & HYDRANTS TO OPEN LEFT
DEDHAM–WESTWOOD WATER DISTRICT STANDARDS SUPERCEDE THIS DETAIL

UNLESS OTHERWISE NOTED, CONSTRUCTION METHODS, MATERIAL REQUIREMENTS AND METHOD OF MEASUREMENT SHALL BE IN ACCORDANCE WITH THE LATEST EDITION OF THE MASSACHUSETTS DEPARTMENT OF TRANSPORTATION (MASS DOT) STANDARD SPECIFICATIONS.

ALSO REFERENCE CURRENT MASS DOT CONSTRUCTION AND TRAFFIC STANDARD DETAILS.

	DEDHAM DPW **DESIGN & CONSTRUCTION STANDARDS** HYDRANT & TAPPING SLEEVE VALVE	SCALE: NTS	DATE OF ISSUE: FEBRUARY 2011
		REVISED:	
		DETAIL NUMBER: MISC.08	

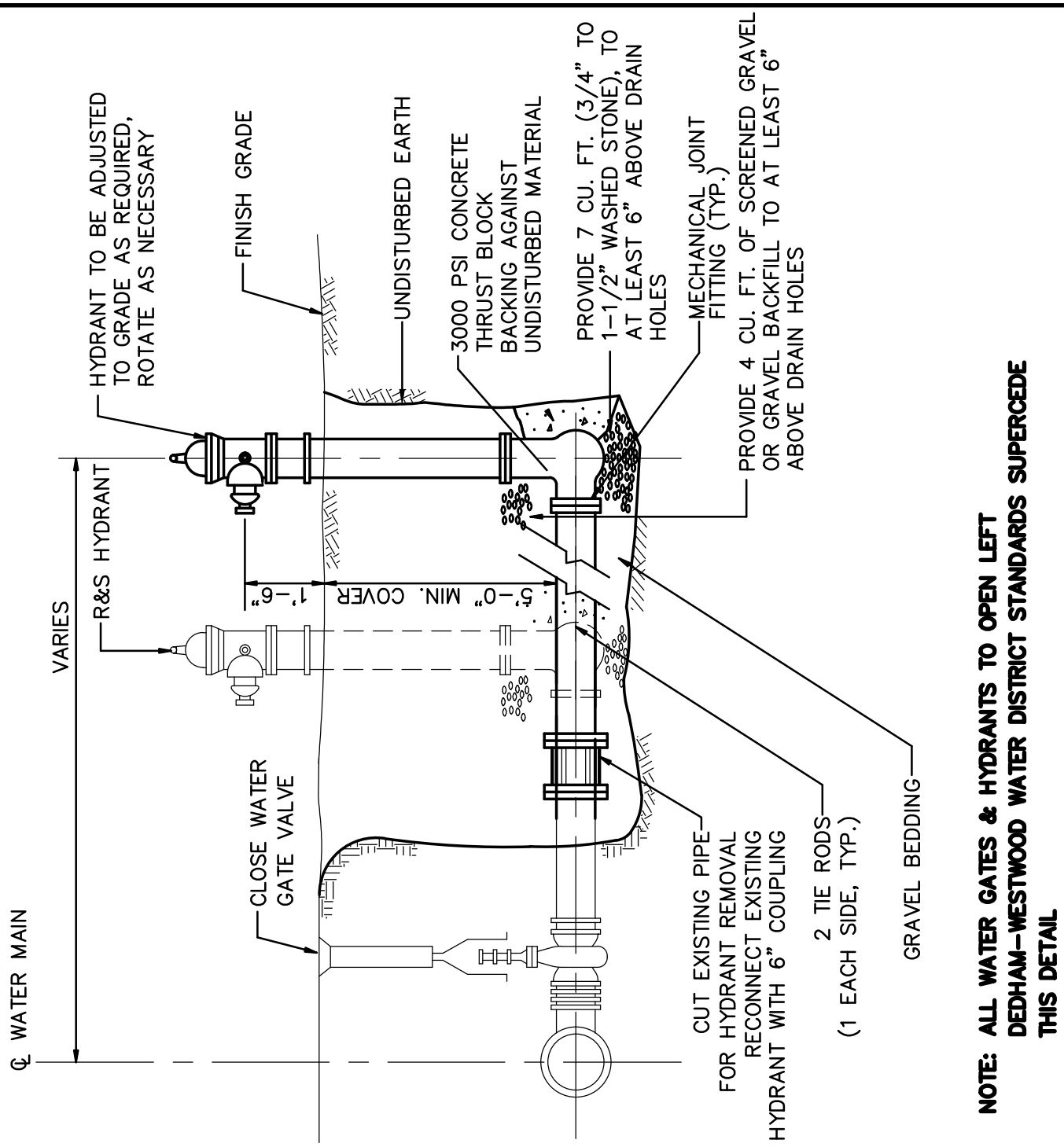

NOTE: ALL WATER GATES & HYDRANTS TO OPEN LEFT
DEDHAM-WESTWOOD WATER DISTRICT STANDARDS SUPERCEDE THIS DETAIL

UNLESS OTHERWISE NOTED, CONSTRUCTION METHODS, MATERIAL REQUIREMENTS AND METHOD OF MEASUREMENT SHALL BE IN ACCORDANCE WITH THE LATEST EDITION OF THE MASSACHUSETTS DEPARTMENT OF TRANSPORTATION (MASS DOT) STANDARD SPECIFICATIONS.

ALSO REFERENCE CURRENT MASS DOT CONSTRUCTION AND TRAFFIC STANDARD DETAILS.

	DEDHAM DPW **DESIGN & CONSTRUCTION STANDARDS** HYDRANT RELOCATION	SCALE: NTS	DATE OF ISSUE: FEBRUARY 2011
		REVISED:	
		DETAIL NUMBER: MISC.09	

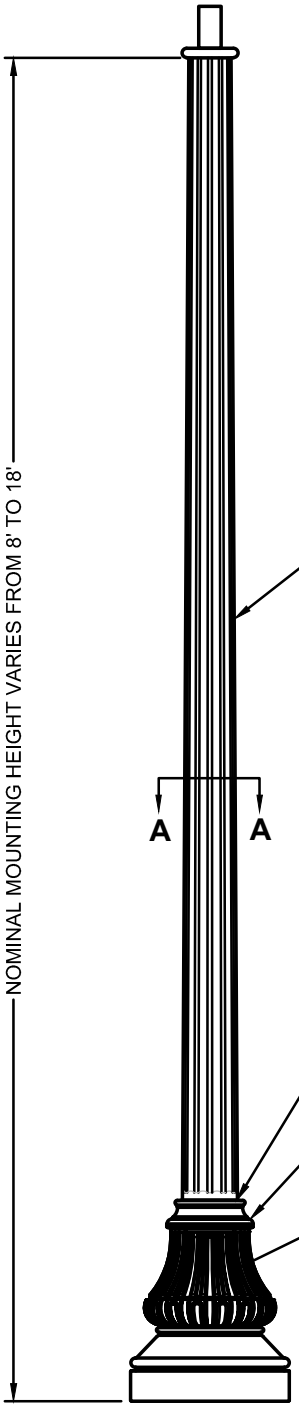

LIGHT POLE SHAFT FABRICATED FROM 6063-T4 ALUMINUM TUBE (LIGHT POLE ASSEMBLY IS HEAT TREATED TO T6 CONDITION AFTER WELDING)

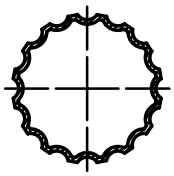

SECTION A-A
16 FLAT FLUTE

6" O.D. x .188" WALL @POLE BOTTOM

CAST ALUMINUM WASHINGTON DECORATIVE ANCHOR BASE SEE "**BASE DETAIL" & "DETAIL B**"

4" x 6" ALUMINUM HANDHOLE DOOR

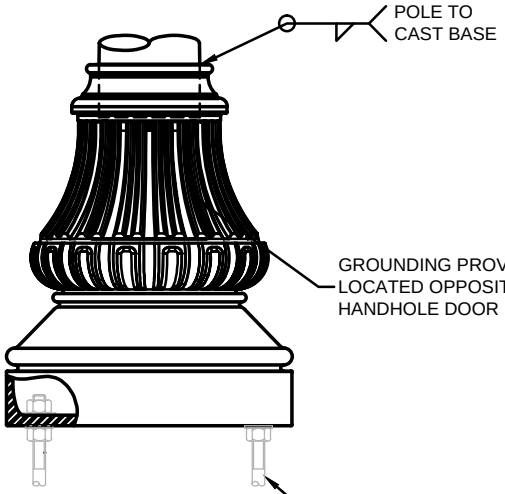

BASE DETAIL

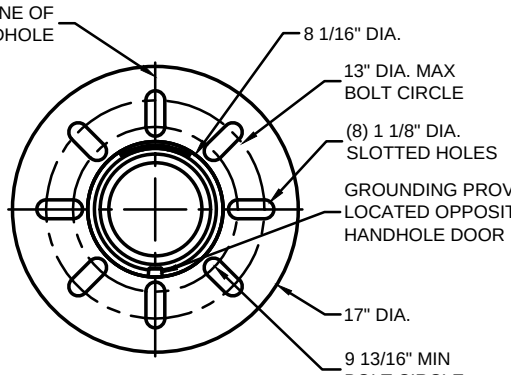

DETAIL B
(BOTTOM VIEW)

NOTES:

1. LIGHT POLE BASE SHALL BE A VALMONT WASHINGTON BASE LIGHT POLE (WA17–AS) OR APPROVED EQUAL WITH A BLACK POWDERED PAINT FINISH.
2. ANCHOR BOLTS SHALL BE FULLY GALVINIZED WITH A MINIMUM YIELD STRENGTH OF 55 KSI.

UNLESS OTHERWISE NOTED, CONSTRUCTION METHODS, MATERIAL REQUIREMENTS AND METHOD OF MEASUREMENT SHALL BE IN ACCORDANCE WITH THE LATEST EDITION OF THE MASSACHUSETTS DEPARTMENT OF TRANSPORTATION (MASS DOT) STANDARD SPECIFICATIONS.

ALSO REFERENCE CURRENT MASS DOT CONSTRUCTION AND TRAFFIC STANDARD DETAILS.

	DEDHAM DPW **DESIGN & CONSTRUCTION STANDARDS** STANDARD ANCHOR BASE LIGHT POLE	SCALE: NTS	DATE OF ISSUE: FEBRUARY 2011
		REVISED:	
		DETAIL NUMBER: MISC.10	

ATTACHMENT E –

MASSACHUSETTS HIGHWAY DEPARTMENT WHEELCHAIR RAMP STANDARDS

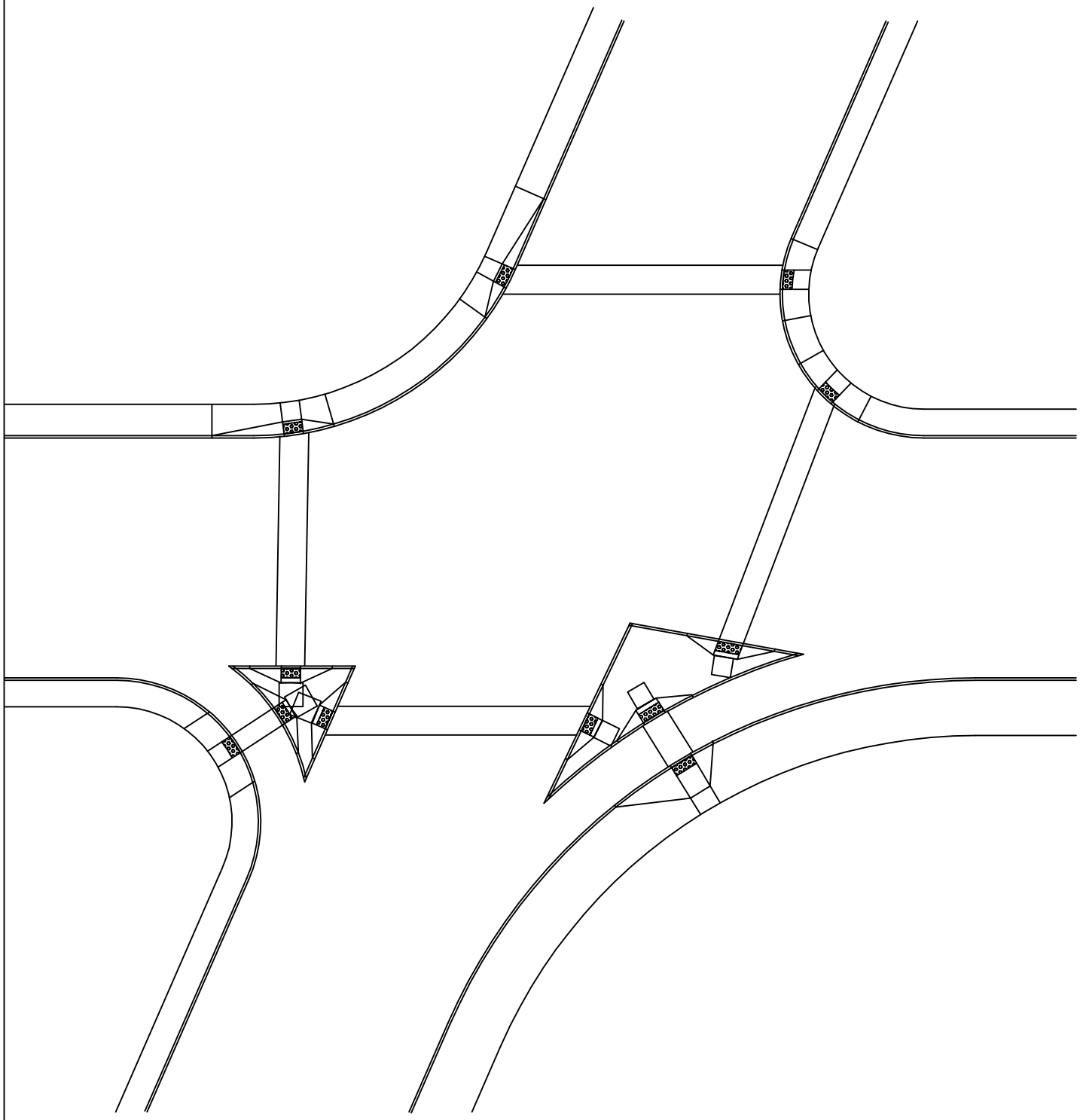

NOTES:

1. LEVEL LANDINGS CAN OVERLAP
2. ISLAND AREAS SUBJECT TO TRAVEL SHOULD BE TREATED AS PLAZAS "NOT MORE THAN 2% SLOPE IN ANY DIRECTION"
3. ALL RAMPS BY REGULATION MUST BE PERPENDICULAR TO THE CURB AT THE GUTTER
4. RAMPS SHOULD BE BOTH ALIGNED TOWARD THE RECEIVING RAMP AND WITHIN THE GENERALLY PREFERRED PEDESTRIAN PHASE OF TRAFFIC

massDOT Massachusetts Department of Transportation Highway Division

CONSTRUCTION STANDARDS

TYPICAL INTERSECTION CROSS WALK LAYOUT

DATE OF ISSUE
JUNE 2014

DRAWING NUMBER
E 107.1.0

massDOT
Massachusetts Department of Transportation
Highway Division

CONSTRUCTION STANDARDS

WHEELCHAIR RAMPS
LESS THAN 12'-4" SIDEWALK

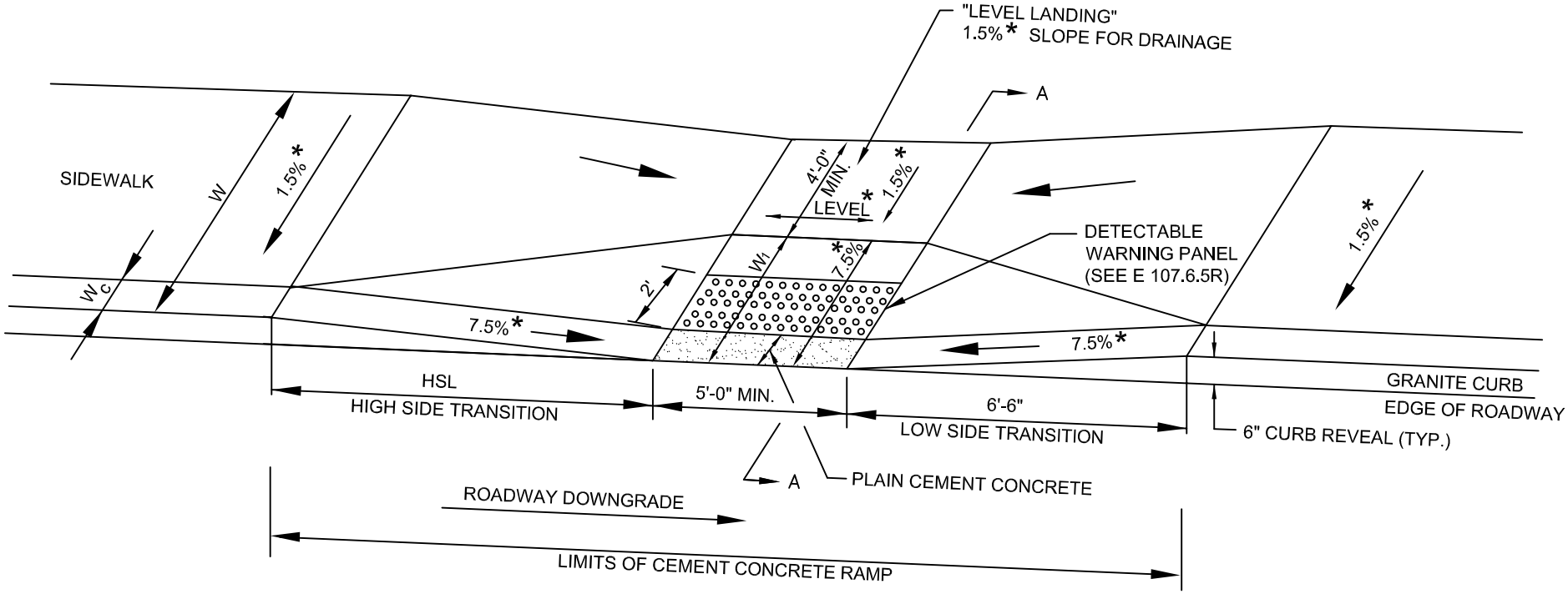

LEGEND

HSL = HIGH SIDE TRANSITION LENGTH (SEE E 107.9.0R)

W = SIDEWALK WIDTH

W_c = CURB WIDTH

W_1 = PERPENDICULAR RAMP LENGTH

CC = CEMENT CONCRETE

* = TOLERANCE FOR CONSTRUCTION ±0.5%

USABLE SIDEWALK WIDTH PER AAB = W-Wc

RAMP LENGTH, W1 = W-4'-0" Min

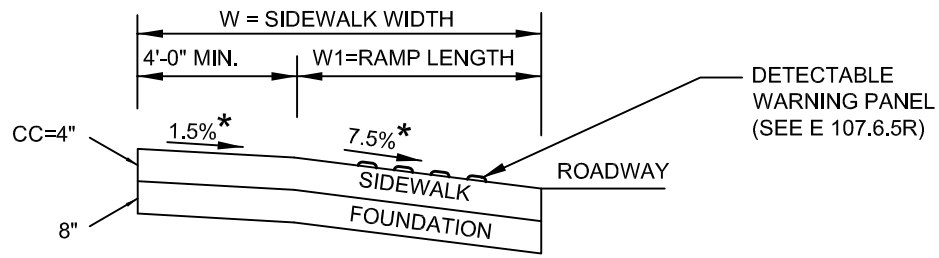

SECTION A-A

DATE OF ISSUE
JUNE 2014

DRAWING NUMBER
E 107.2.0

massDOT
Massachusetts Department of Transportation
Highway Division

CONSTRUCTION STANDARDS

WHEELCHAIR RAMP ON NARROW SIDEWALK WITH DETECTABLE WARNING PANEL

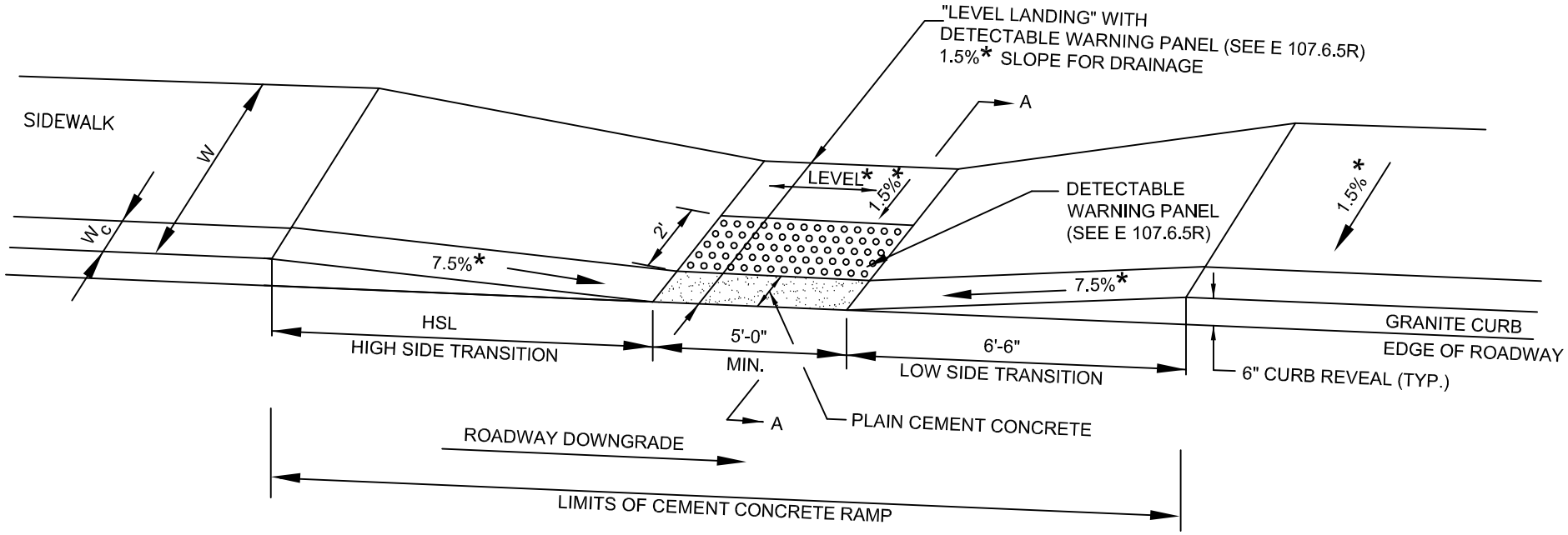

LEGEND

HSL = HIGH SIDE TRANSITION LENGTH (SEE E 107.9.0R)

W = SIDEWALK WIDTH

W_C = CURB WIDTH

CC = CEMENT CONCRETE

* = TOLERANCE FOR CONSTRUCTION ±0.5%

USABLE SIDEWALK WIDTH PER AAB = W-Wc
USABLE SIDEWALK WIDTH PER AAB IS NOT TO BE LESS THAN 4'0"
SEE E 107.6.5R FOR DETAILS OF DETECTABLE WARNING PANEL

NOTE:

ROADWAY, GUTTER, AND FIRST 6" OF SIDEWALK TO BE ADJUSTED FOR FIELD CONDITIONS

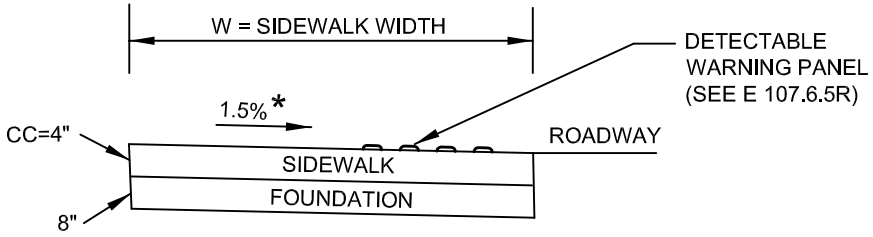

SECTION A-A

DATE OF ISSUE
JUNE 2014

DRAWING NUMBER
E 107.2.1

massDOT
Massachusetts Department of Transportation
Highway Division

CONSTRUCTION STANDARDS

WHEELCHAIR RAMPS
GREATER THAN 12'-4" SIDEWALK

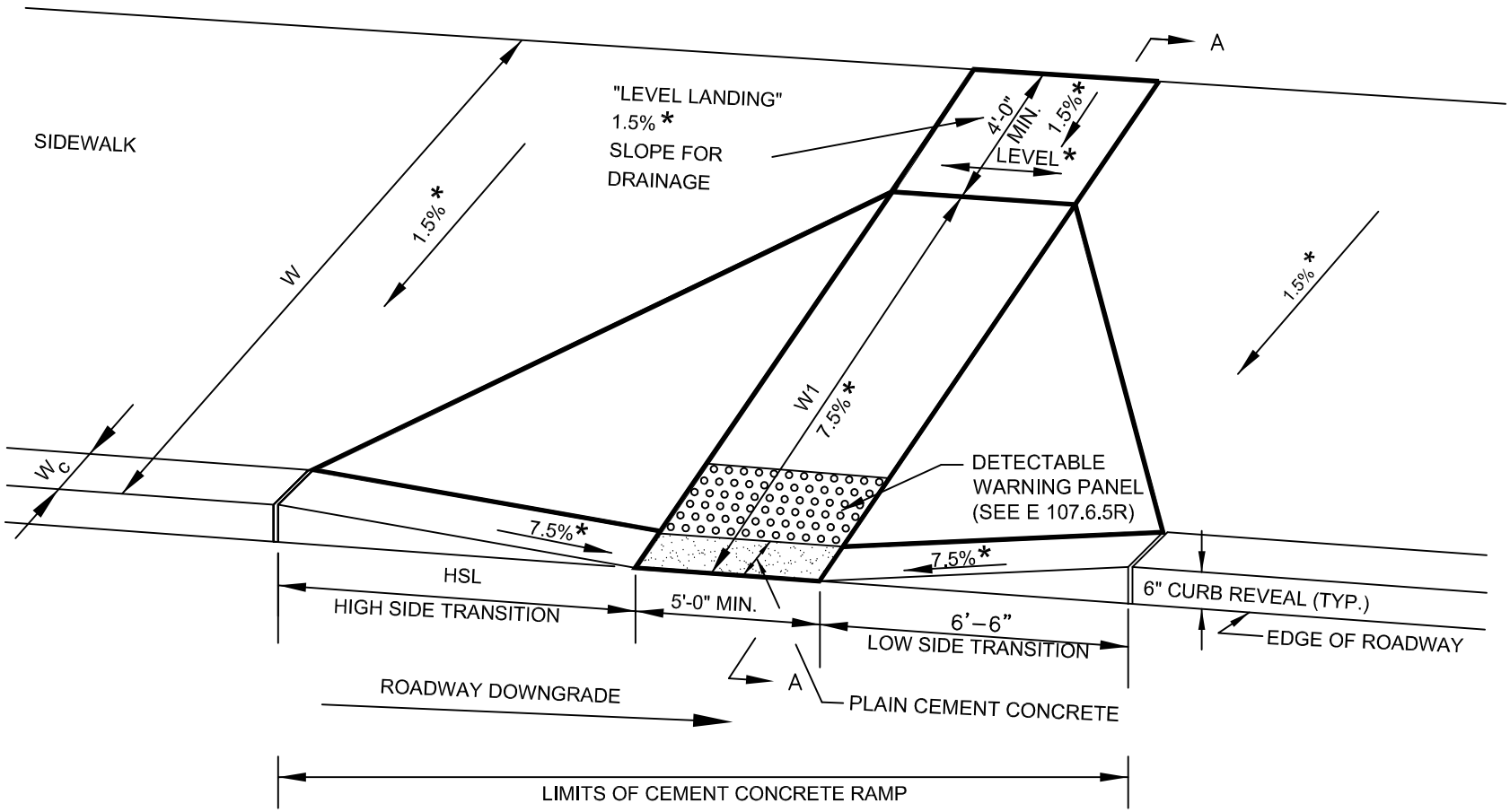

LEGEND

HSL = HIGH SIDE TRANSITION LENGTH (SEE E 107.9.0R)

W = SIDEWALK WIDTH

W_C = CURB WIDTH

W 1 = PERPENDICULAR RAMP LENGTH

Cc = CEMENT CONCRETE

* = TOLERANCE FOR CONSTRUCTION ±0.5%

USABLE SIDEWALK WIDTH PER AAB = W-Wc

RAMP LENGTH, W1 = W-4'-0" Min

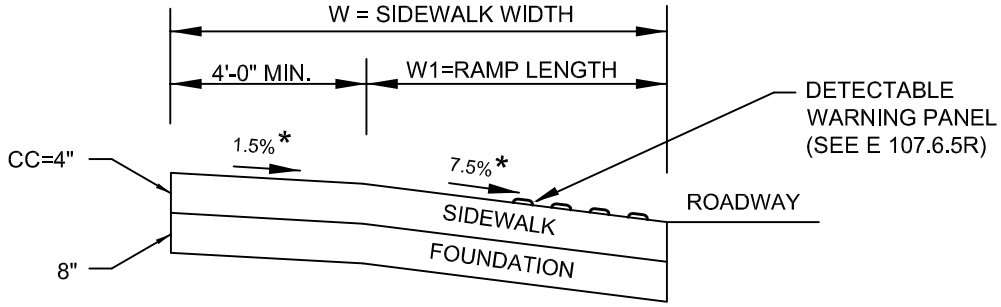

SECTION A-A

DATE OF ISSUE
JUNE 2014

DRAWING NUMBER
E 107.3.0

massDOT
Massachusetts Department of Transportation
Highway Division

CONSTRUCTION STANDARDS

WHEELCHAIR RAMP FOR ONE CONTINUOUS DIRECTION OF PEDESTRIAN TRAVEL

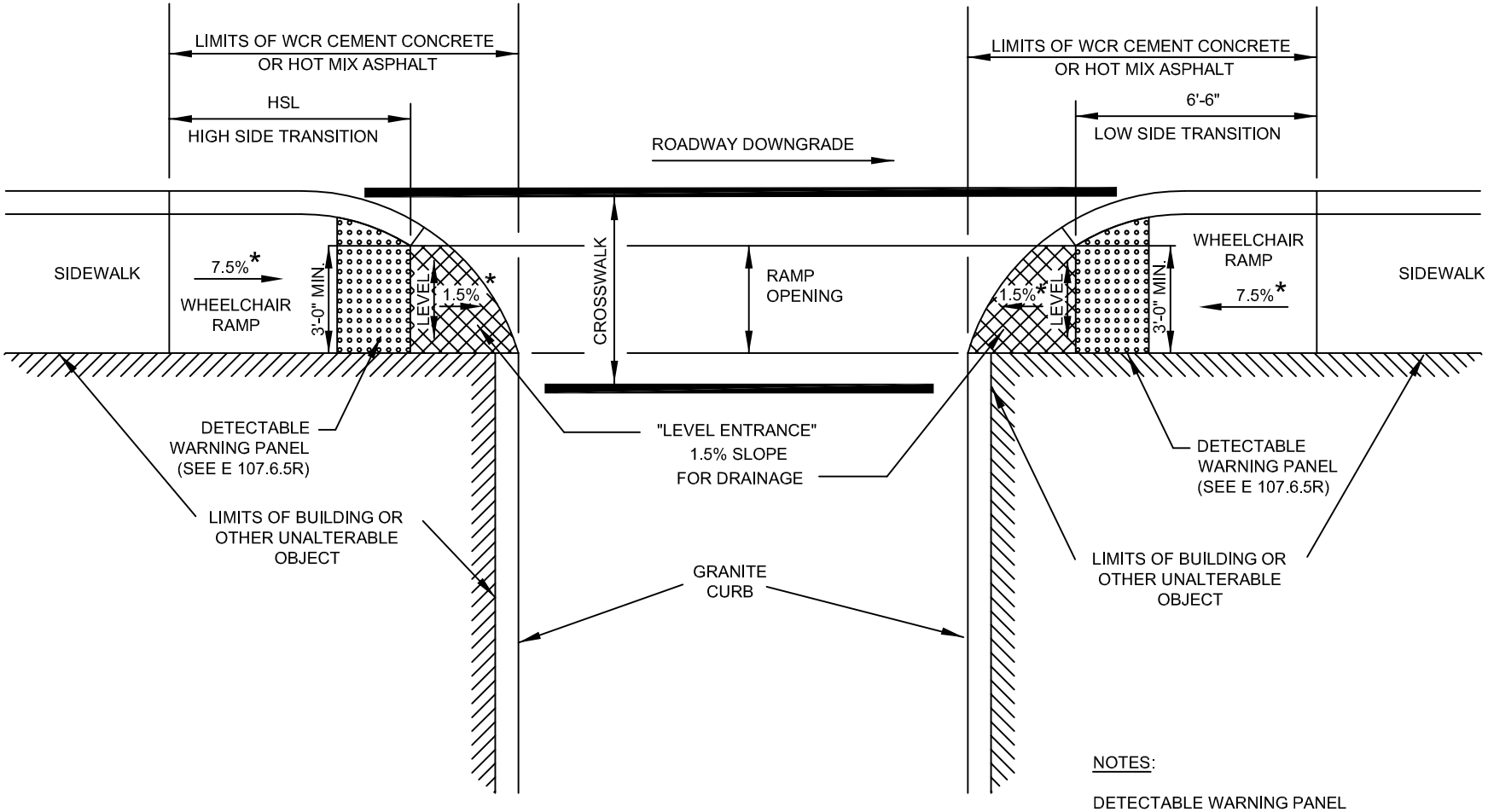

LEGEND

HSL = HIGH SIDE TRANSITION LENGTH
(SEE E 107.9.0R)

* = TOLERANCE FOR CONSTRUCTION ±0.5%

NOTES:

DETECTABLE WARNING PANEL
LOCATED NOT LESS THAN 6" OR MORE THAN 24"
FROM ROADWAY EDGE (GUTTER LINE). TRUNCATED
DOMES TO BE ALIGNED WITH DIRECTION OF TRAVEL.

FOR DETAILS OF TRUNCATED DOMES SEE DRAWING
E 107.6.5R.

ROADWAY, GUTTER, AND FIRST 6" OF SIDEWALK TO
BE ADJUSTED FOR FIELD CONDITIONS.

DATE OF ISSUE
JUNE 2014

DRAWING NUMBER
E 107.6.0

massDOT
Massachusetts Department of Transportation
Highway Division

CONSTRUCTION STANDARDS

WHEELCHAIR RAMP WITH 3" CURB REVEAL

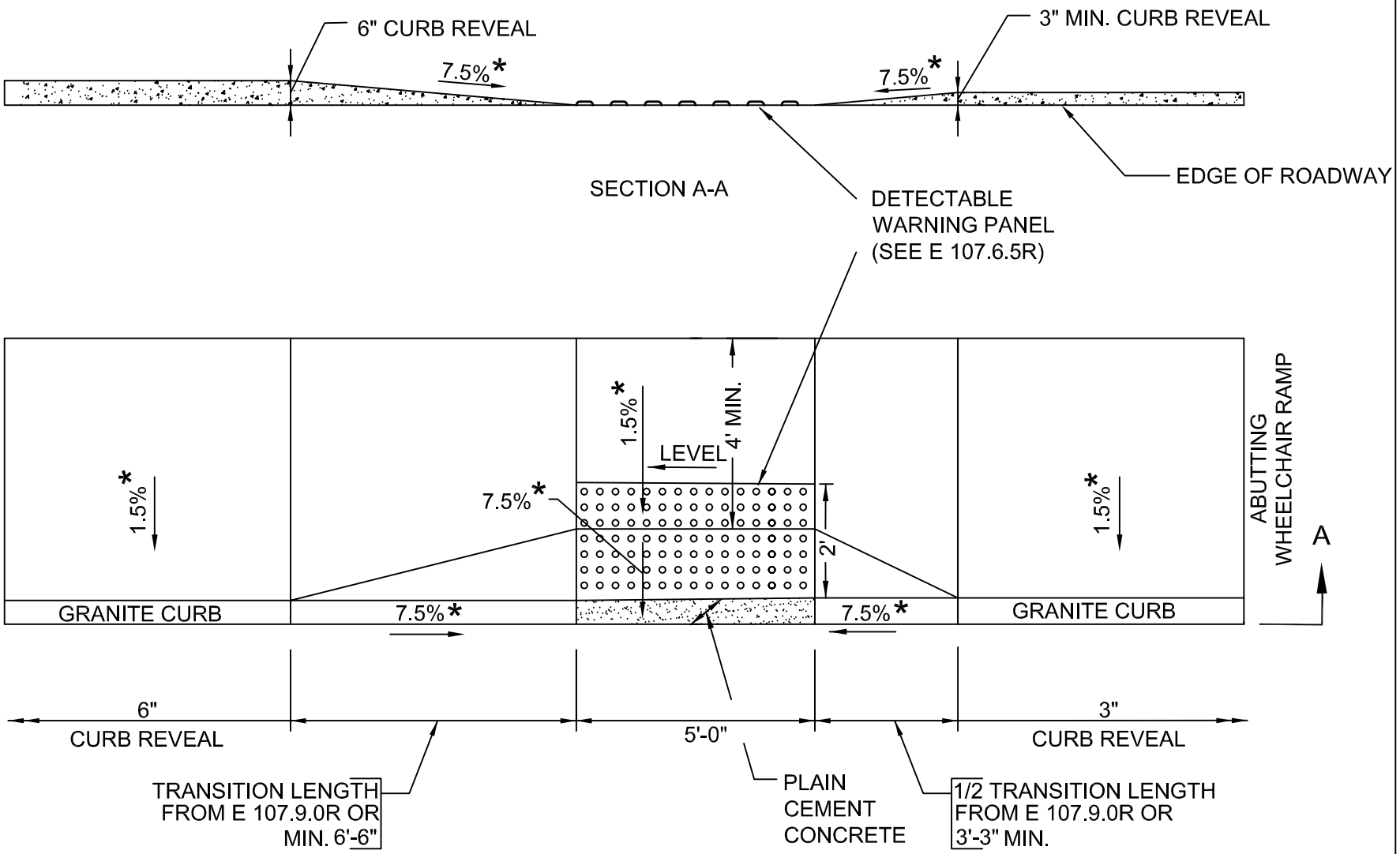

LEGEND

HSL = HIGH SIDE TRANSITION LENGTH
SEE E 107.9.0R

* = TOLERANCE FOR CONSTRUCTION ±0.5%

DATE OF ISSUE
JUNE 2014

DRAWING NUMBER
E 107.6.3

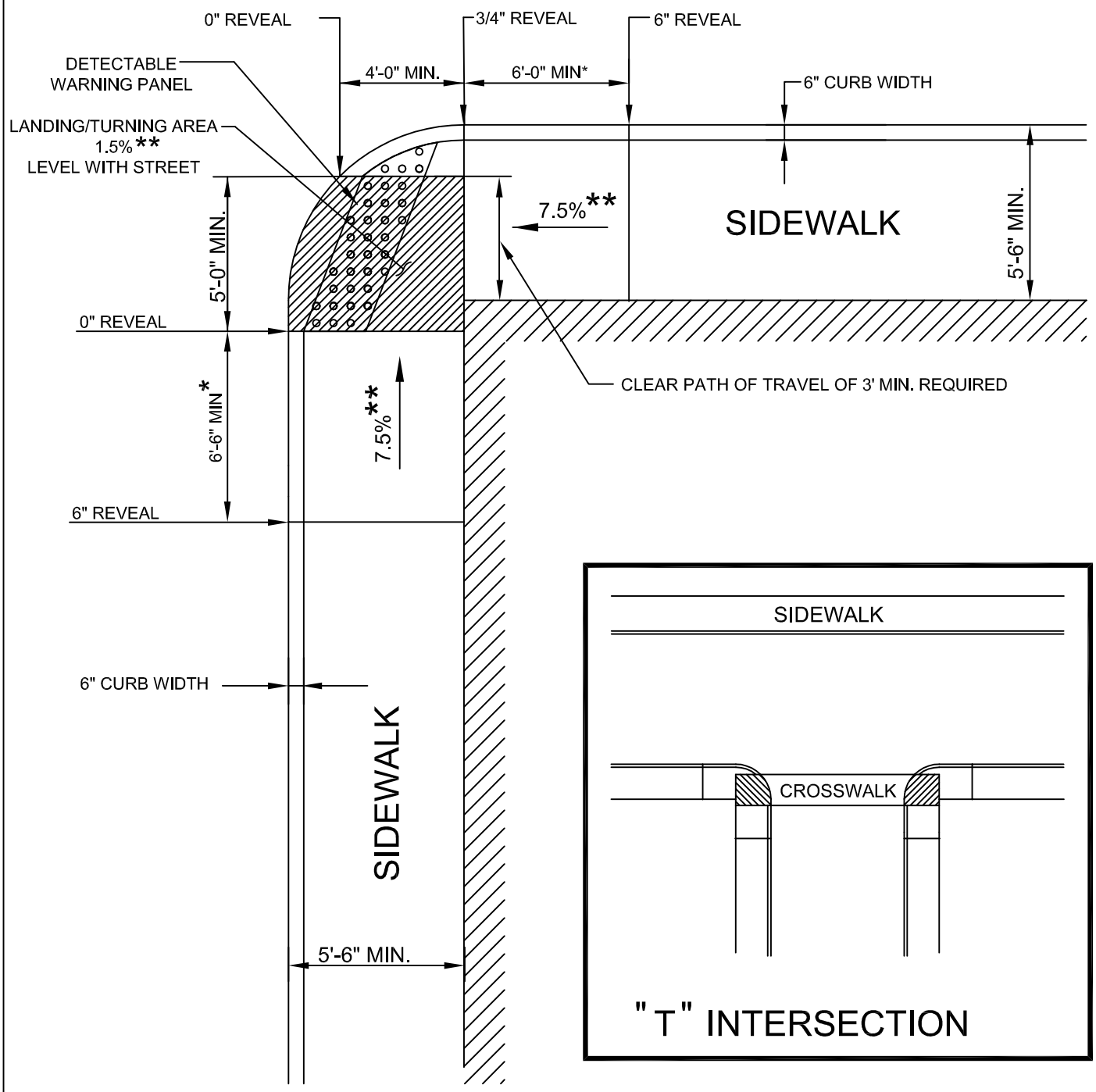

LEGEND

BUILDING OR OTHER UNALTERABLE CONDITION

* TRANSITION LENGTH SHOWN IS MINIMUM. (SEE E 107.9.0R)

** TOLERANCE FOR CONSTRUCTION ±0.5%

NOTE:

ROADWAY, GUTTER, AND FIRST 6" OF SIDEWALK TO BE ADJUSTED FOR FIELD CONDITIONS

massDOT Massachusetts Department of Transportation Highway Division

CONSTRUCTION STANDARDS

"T" INTERSECTION WHEELCHAIR RAMP

DATE OF ISSUE JUNE 2014

DRAWING NUMBER **E 107.6.4**

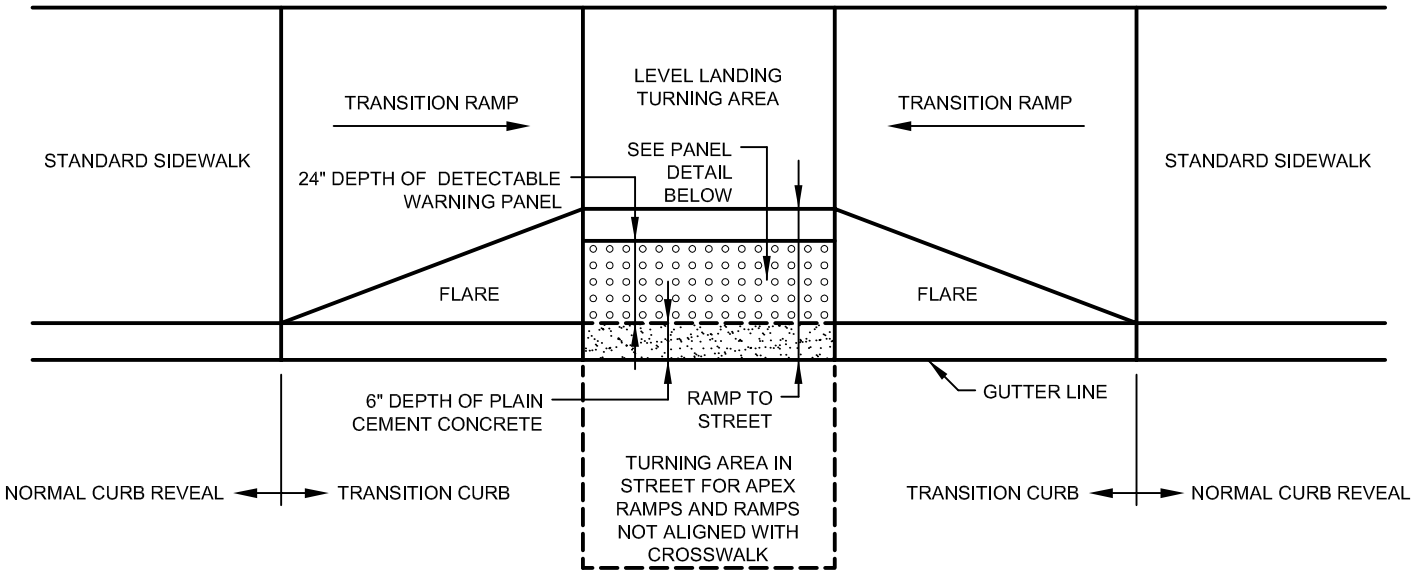

TYPICAL INSTALLATION

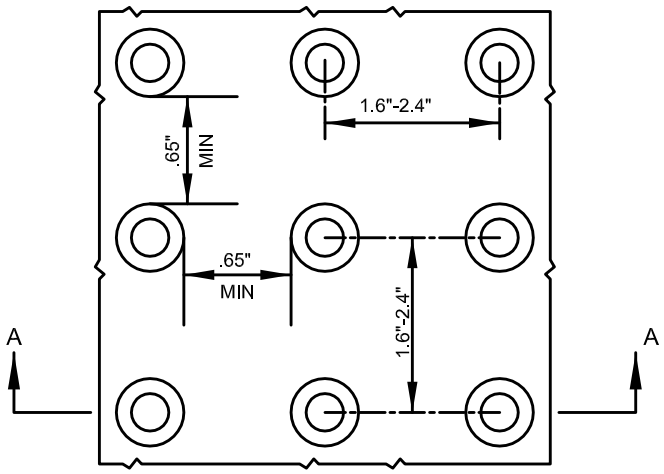

DETAIL OF DETECTABLE WARNING PANEL

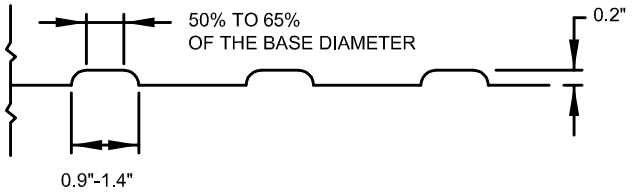

SECTION A-A

NOTE:

PANELS MAY BE CONCRETE PRECAST OR CAST IN PLACE OR OTHER SUITABLE MATERIAL PERMANENTLY APPLIED TO THE RAMP. DETECTABLE WARNING SURFACES SHALL CONTRAST VISUALLY WITH ADJACENT WALKING SURFACES EITHER LIGHT-ON-DARK, OR DARK-ON-LIGHT.

massDOT Massachusetts Department of Transportation Highway Division
CONSTRUCTION STANDARDS

DETECTABLE WARNING PANEL FOR WHEELCHAIR RAMPS AND STANDARD RAMP TERMINOLOGY

DATE OF ISSUE
JUNE 2014

DRAWING NUMBER
E 107.6.5

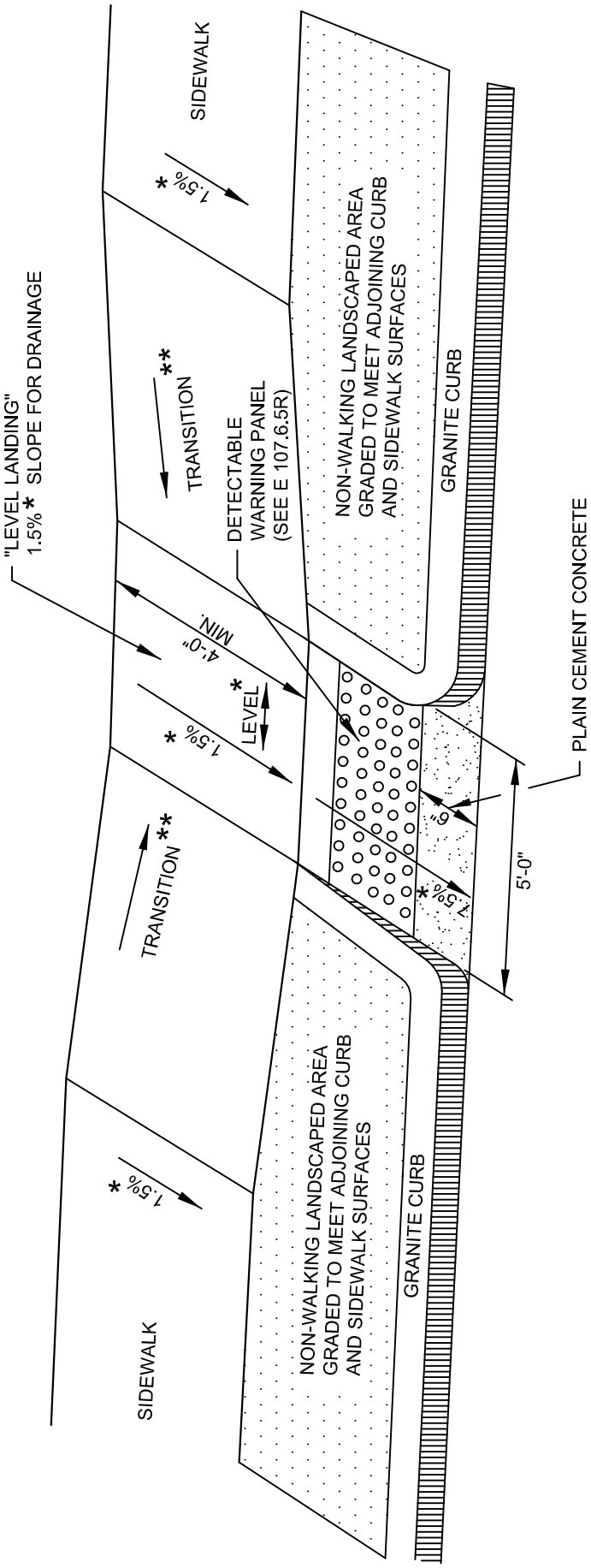

LEGEND

* = TOLERANCE FOR CONSTRUCTION ±0.5%

** = SEE E 107.9R FOR TRANSITION LENGTH

massDOT Massachusetts Department of Transportation Highway Division

CONSTRUCTION STANDARDS

WHEELCHAIR RAMP WITH LANDSCAPING STRIP

DATE OF ISSUE
JUNE 2014

DRAWING NUMBER
E 107.6.9

ROADWAY PROFILE GRADE	* HIGH SIDE TRANSITION LENGTH
%	ENGLISH UNITS
=0%	6'-6"
>0% TO 1%	7'-8"
>1% TO 2%	9'-0"
>2% TO 3%	11'-0"
>3% TO 4%	14'-0"
>4% TO 5%	15'-0" Max

NOTE:

* BASED ON A DESIGN SLOPE OF 7.5% AND A REVEAL OF 6".

massDOT
Massachusetts Department of Transportation
Highway Division

CONSTRUCTION STANDARDS

CURB TRANSITION LENGTH FOR WHEELCHAIR RAMPS

DATE OF ISSUE
JUNE 2014

DRAWING NUMBER
E 107.9.0

SECTION 00850

Excerpts from Chapter 149 and Chapter 30 of the Massachusetts General Laws

Certain excerpts from the Massachusetts General Laws are applicable to Construction contracts. Attention is directed to the following Sections of Chapter 149 as amended:

Section 25. "Every employee in public work shall lodge, board, and trade where and with whom he elects; and no person or his agents or employees under contract with the commonwealth, a county, city or town, or with a department, board, commission or officer acting therefor, for the doing of public work shall directly or indirectly require, as a condition of employment therein, that the employee shall lodge, board or trade at a particular place or with a particular person. This section shall be made a part of the contract for such employment."

Section 26. "In the employment of mechanics and apprentices, teamsters, chauffeurs and laborers in the construction of public works by the commonwealth, or by a county, town or district, or by persons contracting or subcontracting for such works, preference shall first be given to citizens of the commonwealth who have been residents of the commonwealth for at least six months at the commencement of their employment who are male veterans as defined in clause Forty-third of section seven of chapter four, and who are qualified to perform the work to which the employment relates; and secondly, to citizens of the commonwealth generally who have been residents of the commonwealth for at least six months at the commencement of their employment, and if they cannot be obtained in sufficient numbers, then to citizens of the United States, and every contract for such work shall contain a provisions to this effect..."

Section 34. "Every contract, except for the purchase of material or supplies, involving the employment of laborers workmen, mechanics, foremen or inspectors, to which the commonwealth or any county or any town, subject to section thirty, is a party, shall contain a stipulation that no laborer, workman, mechanic, foreman or inspector working within the commonwealth, in the employ of the contractor, subcontractor or other person doing or contracting to do the whole or a part of the work contemplated by the contract, shall be required or permitted to work more than eight hours in any one-day or more than forty-eight hours in any one week, or more than six-days in any one week, except in cases of emergency, or in case any town subject to section thirty-one is a party to such a contract, more than eight hours in any one-day except as aforesaid..."

Section 34A. "Every contract for the construction, alteration, maintenance, repair or demolition of or addition to, any public building or other public works for the commonwealth or any political subdivision thereof shall contain stipulations requiring that the contractor shall, before commencing performance of such contract, provide by insurance for the payment of compensation and the furnishing of other benefits under chapter one hundred and fifty-two to all persons to be employed under the contract, and that the contractor shall continue such insurance in full force and effect during the term of

the contract. No officer or agent contracting in behalf of the commonwealth or any political subdivision thereof shall award such a contract until he has been furnished with sufficient proof of compliance with the aforesaid stipulations. Failure to provide and continue in force such insurance as aforesaid shall be deemed a material breach of the contract and shall operate as an immediate termination thereof. No cancellation of such insurance, whether by the insurer or by the insured, shall be valid unless written notice thereof is given by the party proposing cancellation to the other party and to the officer or agent who awarded the contract at least fifteen-days prior to the intended effective date thereof, which date shall be expressed in said notice. Notice of cancellation sent by the party proposing cancellation by registered mail, postage prepaid, with a return receipt of the addressee requested, shall be a sufficient notice..."

Section 34B. "Every contract for the construction, alteration, maintenance, repair of demolition of, or addition to, any public works for the commonwealth or any political subdivision thereof shall contain stipulations requiring that the contractor shall pay to any reserve police officer employed by him in any city or town the prevailing rate of wage paid to regular police officers employed by him in such city or town."

Attention is directed to the following sections of Chapter 30 of the General Laws of Massachusetts as amended to date:

Section 39F. "(1) Every contract awarded pursuant to sections forty-four A to L inclusive, of chapter one hundred and forty-nine shall contain the following subparagraphs (a) through (i) and every contract awarded pursuant to section thirty-nine M of chapter thirty shall contain the following subparagraphs (a) through (h) and in each case those subparagraphs shall be binding between the general contractor and each subcontractor."

"(a) Forthwith after the general contractor receives payment on account of a periodic estimate, the general contractor shall pay to each subcontractor the amount paid for the labor performed and the materials furnished by that subcontractor, less any amount specified in any court proceedings barring such payment and also less any amount claimed due from the subcontractor by the general contractor.

"(b) Not later than the sixty-fifth-day after each subcontractor substantially completes his work in accordance with the plans and specifications, the entire balance due under the subcontract less amounts retained by the awarding authority as the estimated cost of completing the incomplete and unsatisfactory items of work, shall be due the subcontractor; and the awarding authority shall pay that amount to the general contractor. The general contractor shall forthwith pay to the subcontractor the full amount received from the awarding authority less any amount specified in any court proceedings barring such payment and also less any amount claimed due from the subcontractor by the general contractor.

"(c) Each payment made by the awarding authority to the general contractor pursuant to subparagraphs (a) and (b) of this paragraph for the labor performed and the materials furnished by a subcontractor shall be made to the general contractor for the account of that subcontractor; and the awarding authority shall take reasonable steps to compel the general contractor to make each such payment to each such subcontractor. If the awarding authority has received a demand for direct payment from a subcontractor for any amount which has already been included in a payment to the general contractor or which is to be included in a payment to the general contractor for payment to the subcontractor as provided in subparagraphs (a) and (b), the awarding authority shall act upon the demand as provided in this section.

"(d) If, within seventy-days after the subcontractor has substantially completed the subcontract work, the subcontractor has not received from the general contractor the balance due under the subcontract including any amount due for extra labor and materials furnished to the general contractor, less any amount retained by the awarding authority as the estimated cost of completing the incomplete and unsatisfactory items of work, the subcontractor may demand direct payment of that balance from the awarding authority. The demand shall be by a sworn statement delivered to or sent by certified mail to the awarding authority, and a copy shall be delivered or sent by certified mail to the general contractor at the same time. The demand shall contain a detailed breakdown of the balance due under the subcontract and also a statement of the status of completion of the subcontract work. Any demand made after substantial completion of the subcontract work shall be valid even if delivered or mailed prior to the seventieth-day after the subcontractor has substantially completed the subcontract work. Within ten-days after the subcontractor has delivered or so mailed the demand to the awarding authority and delivered or so mailed a copy to the general contractor, the general contractor may reply to the demand. The reply shall be by a sworn statement delivered to or sent by certified mail to the awarding authority and a copy shall be delivered to or sent by certified mail to the subcontractor at the same time. The reply shall contain a detailed breakdown of the balance due under the subcontract including any amount due for extra labor and materials furnished to the general contractor and of the amount due for each claim made by the general contractor against the subcontractor.

"(e) Within fifteen-days after receipt of the demand by the awarding authority, but in no event prior to the seventieth-day after substantial completion of the subcontract work, the awarding authority shall make direct payment to the subcontractor of the balance due under the subcontract including any amount due for extra labor and materials furnished to the general contractor, less any amount (i) retained by the awarding authority as the estimated cost of completing the incomplete or unsatisfactory items of

work, (ii) specified in any court proceedings barring such payment, or (iii) disputed by the general contractor in the sworn reply; provided, that the awarding authority shall not deduct from a direct payment any amount as provided in part (iii) if the reply is not sworn to, or for which the sworn reply does not contain the detailed breakdown required by subparagraph (d). The awarding authority shall make further direct payments to the subcontractor forthwith after the removal of the basis for deductions from direct payments made as provided in parts (i) and (ii) of this subparagraph.

"(f) The awarding authority shall forthwith deposit the amount deducted from a direct payment as provided in part (iii) of subparagraph (e) in an interest-bearing joint account in the names of the general contractor and the subcontractor in a bank in Massachusetts selected by the awarding authority or agreed upon by the general contractor and the subcontractor and shall notify the general contractor and the subcontractor of the date of the deposit and the bank receiving the deposit. The bank shall pay the amount in the account, including accrued interest, as provided in an agreement between the general contractor and the subcontractor or as determined by decree of a court of competent jurisdiction.

"(g) All direct payments and all deductions from demands for direct payments deposited in an interest-bearing account or accounts in a bank pursuant to subparagraph (f) shall be made out of amounts payable to the general contractor at the time of receipt of a demand for direct payment from a subcontractor and out of amounts which later become payable to the general contractor and in the order of receipt of such demands from subcontractors. All direct payments shall discharge the obligation of the awarding authority to the general contractor to the extent of such payment.

"(h) The awarding authority shall deduct from payments to a general contractor amounts which, together with the deposits in interest-bearing accounts pursuant to subparagraph (f), are sufficient to satisfy all unpaid balances of demands for direct payment received from subcontractors. All such amounts shall be earmarked for such direct payments, and the subcontractors shall have a right in such deductions prior to any claims against such amounts by creditors of the general contractor.

"(i) If the subcontractor does not receive payment as provided in subparagraph (a) or if the general contractor does not submit a periodic estimate for the value of the labor or materials performed or furnished by the subcontractor and the subcontractor does not receive payment for same when due less the deductions provided for in subparagraph (a), the subcontractor may demand direct payment by following the procedure in subparagraph (d) and the general contractor may file a sworn replay as provided in that same subparagraph. A demand made after the first-day of

the month following that for which the subcontractor performed or furnished the labor and materials for which the subcontractor seeks payment shall be valid even if delivered or mailed prior to the time payment was due on a periodic estimate from the general contractor. Thereafter the awarding authority shall proceed as provided in subparagraph (e), (f), (g), and (h)."

Section 39G. "Upon substantial completion of the work required by a contract with the commonwealth, or any agency or political subdivision thereof, for the construction, reconstruction, alteration, remodeling, repair or improvement of public ways, including bridges and other highway structures, sewers and water mains, airports and other public works, the contractor shall present in writing to the awarding authority its certification that the work has been substantially completed. Within twenty-one-days thereafter, the awarding authority shall present to the contractor either a written declaration that the work has been substantially completed or an itemized list of incomplete or unsatisfactory work items required by the contract sufficient to demonstrate that the work has not been substantially completed. The awarding authority may include with such list a notice setting forth a reasonable time, which shall not in any even be prior to the contract completion date, within which the contractor must achieve substantial completion of the work. In the event that the awarding authority fails to respond by presentation of a written declaration or itemized list as aforesaid, to the contractor's certificate within the twenty-one-day period, the contractor's certification shall take effect as the awarding authority's declaration that the work has been substantially completed.

"Within sixty-five-days after the effective date of a declaration of substantial completion, the awarding authority shall prepare and forthwith send to the contractor for acceptance a substantial completion estimate for the quantity and price of the work done and all but one percent retainage on that work, including the quantity, price and all but one percent retainage for the undisputed part of each work item and extra work item in dispute but excluding the disputed part thereof, less the estimated cost of completing all incomplete and unsatisfactory work items and less the total periodic payments made to date for the work. The awarding authority also shall deduct from the substantial completion estimate an amount equal to the sum of all demands for direct payment filed by subcontractors and not yet paid to subcontractors or deposited in joint accounts pursuant to section thirty-nine F, but no contract subject to said section thirty-nine F shall contain any other provisions authorizing the awarding authority to deduct any amount by virtue of claims asserted against the contract by subcontractors, material suppliers or other.

"If the awarding authority fails to prepare and send to the contractor any substantial completion estimate required by this section on or before the date hereinabove set forth, the awarding authority shall pay to the contractor interest on the amount which would have been due to the contractor pursuant to such substantial completion estimate at the rate of three percentage points above the rediscount rate then charged by the Federal Reserve Bank of Boston from such date to the date on which the awarding authority sends that substantial completion estimate to the contractor for acceptance or to the date

of payment therefor, whichever occurs first. The awarding authority shall include the amount of such interest in the substantial completion estimate.

"Within fifteen-days after the effective date of the declaration of substantial completion, the awarding authority shall send to the contractor by certified mail, return receipt requested, a complete list of all incomplete or unsatisfactory work items, and, unless delayed by causes beyond his control, the contractor shall complete all such work items within forty-five-days after the receipt of such list or before the then contract completion date, whichever is later. If the contractor fails to complete such work within such time, the awarding authority may, subsequent to seven-days' written notice to the contractor by certified mail, return receipt requested, terminate the contract and complete the incomplete or unsatisfactory work items and charge the cost of same to the contractor.

"Within thirty-days after receipt by the awarding authority of a notice from the contractor stating that all of the work required by the contract has been completed, the awarding authority shall prepare and forthwith send to the contractor for acceptance a final estimate for the quantity and price of the work done and all retainage on that work less all payments made to date, unless the awarding authority's inspection shows that work items required by the contract remain incomplete or unsatisfactory, or that documentation required by the contract has not been completed. If the awarding authority fails to prepare and send to the contractor the final estimate within thirty-days after receipt of notice of completion, the awarding authority shall pay to the contractor interest on the amount which would have been due to the contractor pursuant to such final estimate at the rate hereinabove provided from the thirtieth-day after such completion until the date on which the awarding authority sends the final estimate to the contractor for acceptance or the date of payment therefor, whichever occurs first, provided that the awarding authority's inspection shows that not work items required by the contract remain incomplete or unsatisfactory. Interest shall not be paid hereunder on amounts for which interest is required to be paid in connection with the substantial completion estimate as hereinabove provided. The awarding authority shall include the amount of the interest required to be paid hereunder in the final estimate.

"The awarding authority shall pay the amount due pursuant to any periodic, substantial completion or final estimate within thirty-five-days after receipt of written acceptance for such estimate from the contractor and shall pay interest on the amount due pursuant to such estimate at the rate hereinabove provided from that thirty-fifth-day to the date of payment. In the case of periodic payment, the contracting authority may deduct from its payment a retention based on its estimate of the fair value of its claim against the contractor, a retention for direct payments to subcontractors based on demands for same in accordance with the provisions of section thirty-nine F, and a retention to secure satisfactory performance of the contractual work not exceeding five percent of the approved amount of any periodic payments, and the same right to retention shall apply to bonded subcontractors entitled to direct payment under section thirty-nine F of chapter thirty; provided that a five percent value of all items that are planted in the ground shall be deducted from the periodic payments until final acceptance.

"No periodic, substantial completion or final estimate or acceptance or payment thereof shall bar a contractor from reserving all rights to dispute the quantity and amount of, or the failure of the awarding authority to approve a quantity and amount of, all or part of any work item or extra work item.

"Substantial completion, for the purposes of this section, shall mean either that the work required by the contract has been completed except for work having a contract price of less than one percent of the then adjusted total contract price, or substantially all of the work has been completed and opened to public use except for minor incomplete or unsatisfactory work items that do not materially impair the usefulness of the work required by the contract."

Section 39K. "Every contract for the construction, reconstruction, alteration, remodeling, repair or demolition of any public building by the commonwealth, or by any county, city, town, district, board, commission or other public body, when the amount is more than five thousand dollars in the case of the commonwealth and more than two thousand dollars in the case of any county, city, town, district, board, commission or public body, shall contain the following paragraph: Within fifteen-days (twenty-four-days in the case of the commonwealth) after receipt from the contractor, at the place designated by the awarding authority if such a place is so designated, of a periodic estimate requesting payment of the amount due for the preceding month, the awarding authority will make a periodic payment to the contractor for the work performed during the preceding month and for the materials not incorporated in the work but delivered and suitably stored at the site (or at some location agreed upon in writing) to which the contractor has title or to which a subcontractor has title and has authorized the contractor to transfer title to the awarding authority, less (1) a retention based on its estimate of the fair value of its claims against the contractor and less (2) a retention for direct payments to subcontractors based on demands for same in accordance with the provisions of section thirty-nine F, and less (3) a retention not exceeding five percent of the approved amount of the periodic payment. After the receipt of a periodic estimate requesting final payment and within sixty-five-days after (a) the contractor fully completes the work or substantially completes the work so that the value of the work remaining to be done is, in the estimate of the awarding authority, less than one percent of the original contract price, or (b) the contractor substantially completes the work and the awarding authority takes possession for occupancy, whichever occurs first, the awarding authority shall pay the contractor the entire balance due on the contract less, (1) a retention based on its estimate of the fair value of its claims against the contractor and of the cost of completing the incomplete and unsatisfactory items of work less (2) a retention for direct payments to subcontractors based on demand for same in accordance with the provisions of section thirty-nine F, or based on the record of payments by the contractor to the subcontractors under this contract if such record of payment indicates that the contractor has not paid subcontractors as provided in section thirty-nine F. If the awarding authority fails to make payment as herein provided, there shall be added to each such payment daily interest at the rate of three percentage points above the rediscount rate then charged by the Federal Reserve Bank of Boston commencing on the first-day after said payment is due and continuing until the payment is delivered or mailed to the contractor; provided,

that no interest shall be due, in any event, on the amount due on a periodic estimate for final payment until fifteen-days (twenty-four-days in the case of the commonwealth) after receipt of such a periodic estimate from the contractor, at the place designated by the awarding authority if such a place is so designated. The contractor agrees to pay to each subcontractor a portion of any such interest paid in accordance with the amount due each subcontractor.

"The awarding authority may make changes in any periodic estimate submitted by the contractor and the payment due on said periodic estimate shall be computed in accordance with the changes so made, but such changes or any requirement for a corrected periodic estimate shall not affect the due date for the periodic payment or the date for the commencement of interest charges on the amount of the periodic payment computed in accordance with the changes made, as provided herein; provided, that the awarding authority may, within seven-days after receipt, return to the contractor for correction, any periodic estimate which is not in the required form or which contains computations not arithmetically corrected and, in that event, the date of receipt of such periodic estimate shall be the date of receipt of the corrected periodic estimate in proper form with arithmetically correct computations. The date of receipt of a periodic estimate received on a Saturday shall be the first working day thereafter. The provisions of section thirty-nine G shall not apply to any contract for the construction, reconstruction, alteration, remodeling, repair or demolition of any public building to which this section applies.

"All periodic estimates shall be submitted to the awarding authority, or to its designee as set forth in writing to the contractor, and the date of receipt by the awarding authority or its designee shall be marked on the estimate. All periodic estimates shall contain a separate item for each filed subtrade and each subtrade listed in sub-bid form as required by specifications and a column listing the amount paid to each filed subcontractor and Sub-subcontractor as of the date the periodic estimate is filed. The person making payment for the awarding authority shall add the daily interest provided for herein to each payment for each day beyond the due date based on the date of receipt marked on the estimate.

"A certificate of the architect to the effect that the contractor has fully or substantially completed the work shall, subject to the provisions of section thirty-nine J, be conclusive for the purposes of this section."

Section 39L. "Public Construction work by foreign corporations; restrictions and reports." The Commonwealth and every county, city, town, district, board, commission or other public body which, as the awarding authority, request proposals, bids or sub-bids for any work in the construction, reconstruction, alteration, remodeling, repair or demolition of any public building or other public works (1) shall not enter into a contract for such work with, and shall not approve as a subcontractor furnishing labor and materials for a part of any such work, a foreign corporation which has not filed with such awarding authority a certificate of the state secretary stating that such corporation has complied with sections three and five of chapter one hundred and eighty-one and the date

of such compliance, and (2) shall report to the state secretary and to the department of corporations and taxation any foreign corporation performing work under such contract or subcontract, and any person, other than a corporation, performing work under such contract or subcontract, and residing or having a principal place of business outside the commonwealth.

Section 39M(b). "Specifications for such contracts, and specifications for contracts awarded pursuant to the provisions of said sections forty-four A to forty-four L of said chapter one hundred and forty-nine, shall be written to provide for full competition for each item of material to be furnished under the contract; except, however, that said specifications may be otherwise written for sound reasons in the public interest stated in writing in the public records of the awarding authority or promptly given in writing by the awarding authority to anyone making a written request therefor, in either instance such writing to be prepared after reasonable investigation. Every such contract shall provide that an item equal to that named or described in the said specifications may be furnished; and an item shall be considered equal to the item so named or described if (1) it is at least equal in quality, durability, appearance, strength and design, (2) it will perform at least equally the function imposed by the general design for or the public work being contracted for or the material being purchased, and (3) it conforms substantially, even with deviations, to the detailed requirements for the item in the said specifications.

"For each item of material the specifications shall provide for either a minimum of three named brands of material or a description of material which can be met by a minimum of three manufacturers or producers, and for the equal of any one of said named or described materials."

Section 39N. "Every contract subject to section forty-four A of Chapter one hundred and forty-nine or subject to section thirty-nine M of chapter thirty shall contain the following paragraph in its entirety and an awarding authority may adopt reasonable rules or regulations in conformity with that paragraph concerning the filing, investigation and settlement of such claims:

"If, during the progress of the work, the contractor or the awarding authority discovers that the actual subsurface or latent physical conditions encountered at the site differ substantially or materially from those shown on the plans or indicated in the contract documents either the contractor or the contracting authority may request an equitable adjustment in the contract price of the contract applying to work affected by the differing site conditions. A request for such an adjustment shall be in writing and shall be delivered by the party making such claim to the other party as soon as possible after such conditions are discovered. Upon receipt of such a claim from a contractor, or upon its own initiative, the contracting authority shall make an investigation of such physical conditions, and, if they differ substantially or materially from those shown on the plans or indicated in the contract documents or from those ordinarily encountered and generally recognized as inherent in work of the character provided for in the plans and contract documents and are of such a nature as to cause an increase or decrease in the cost of performance of the work or a change in the construction methods required for the

performance of the work which results in an increase or decrease in the cost of the work, the contracting authority shall make an equitable adjustment in the contract price and the contract shall be modified in writing accordingly."

Section 39O. "Every contract subject to the provisions of section thirty-nine M of this chapter or subject to section forty-four A of chapter one hundred forty-nine shall contain the following provisions (a) and (b) in their entirety....

"(a) The awarding authority may order the general contractor in writing to suspend, delay, or interrupt all or any part of the work for such period of time as it may determine to the appropriate for the convenience of the awarding authority; provided however, that if there is a suspension, delay or interruption for fifteen-days or more due to a failure of the awarding authority to act within the time specified in this contract, the awarding authority shall make an adjustment in the contract price for any increase in the cost of performance of this contract but shall not include any profit to the general contractor on such increase; and provided further, that the awarding authority shall not make any adjustment in the contract price under this provision for any suspension, delay, interruption or failure to act to the extent that such is due to any cause for which this contract provides for an equitable adjustment of the contract price under any other contract provisions.

"(b) The general contractor must submit the amount of a claim under provision (a) to the awarding authority in writing as soon as practicable after the end of the suspension, delay, interruption or failure to act and, in any event, not later than the date of final payment under this contract and, except for costs due to a suspension order, the awarding authority shall not approve any costs in the claim incurred more than twenty-days before the general contractor notified the awarding authority in writing of the act or failure to act involved in the claim.

Section 39P. "Every contract subject to section thirty-nine M of this chapter or section forty-four A of chapter on hundred forty-nine which requires the awarding authority, or any official, its architect or engineer to made a decision on interpretation of the specifications, approval of equipment, material or any other approval, or progress of the work, shall require that the decision be made promptly and, in any even, no later than thirty-days after the written submission for decision; but if such decision requires extended investigation and study, the awarding authority, the official, architect or engineer shall, within thirty-days after the receipt of the submission, give the party making the submission written notice of the reasons why the decision cannot be made within the thirty-day period and the date by which the decision will be made."

Section 39R(a). "The words defined herein shall have the meaning stated below whenever they appear in this section:

(1) "Contractor" means any person, corporation, partnership, joint venture, sole proprietorship, or other entity awarded a contract pursuant to section thirty-nine M of chapter thirty, sections forty-four A through H, inclusive, of chapter one hundred and forty-nine and sections thirty B through thirty P, inclusive, of chapter seven.

(2) "Contract" means any contract awarded or executed pursuant to sections thirty B through thirty P, inclusive, of chapter seven and any contract awarded or executed pursuant to section thirty-nine M of chapter thirty, or sections forty-four A through H, inclusive, of chapter one hundred and forty-nine, which is for an amount or estimated amount greater than on hundred thousand dollars

(3) "Records" means books of original entry, accounts, checks, bank statements and all other banking documents, correspondence, memoranda, invoices, computer printouts, tapes, discs, papers and other documents or transcribed information of any type, whether expressed in ordinary or machine language.

(4) "Independent Certified Public Accountant" means a person duly registered in good standing and entitled to practice as a certified public accountant under the laws of the place of his/her residence or principal office and who is in fact independent. In determining whether an accountant is independent with respect to a particular person, appropriate consideration should be given to all relationships between the accountant and that person or any affiliate thereof. Determination of an accountant's independence shall not be confined to the relationships existing in connection with the filing of reports with the awarding authority.

(5) "Audit," when used in regard to financial statements, means an examination of records by an independent certified public accountant in accordance with generally accepted accounting principles and auditing standards for the purpose of expressing a <u>certified</u> opinion thereon, or, in the alternative, a qualified opinion or a declination to express an opinion for stated reasons.

(6) "Accountant's Report," when used in regard to financial statements, means a document in which an independent certified public accountant indicates the scope of the audit which he/she has made and sets forth his/her opinion regarding the financial statements taken as a whole with a listing of noted exceptions and qualifications, or an assertion to the effect that an overall opinion cannot be expressed. When an overall opinion cannot be expressed the reason therefor shall be stated. An accountant's report shall include as a part thereof a signed statement by the responsible corporate officer attesting that management has fully disclosed all material facts to the independent certified public accountant, and that the audited financial

statement is a true and complete statement of the financial condition of the contractor.

(7) "Management," when used herein, means the chief executive officer, partners, principals or other person or persons primarily responsible for the financial and operational policies and practices of the contractor.

(8) Accounting terms, unless otherwise defined herein, shall have a meaning in accordance with generally accepted accounting principles and auditing standards.

(b) Subsection (a)(2) hereof notwithstanding, every agreement or contract awarded or executed pursuant to sections thirty B through thirty P, inclusive, of chapter seven, and pursuant to section thirty-nine M of chapter thirty or to section forth-five A through H, inclusive, of chapter one hundred and forty-nine, shall provide that:

(1) The contractor shall make, and keep for at least six years after final payment, books, records, and accounts which in reasonable detail accurately and fairly reflect the transactions and dispositions of the contractor, and

(2) Until the expiration of six years after final payment, the awarding authority, office of inspector general, and the deputy commissioner of capital planning and operations shall have the right to examine any books, documents, papers or records of the contractor or of his/her subcontractors that directly pertain to, and involve transactions relating to, the contractor or his/her subcontractors, and

(3) If the agreement is a contract as defined herein, the contractor shall describe any change in the method of maintaining records or recording transactions which materially affect any statements filed with the awarding authority, including in his/her description the date of the change and reasons therefor, and shall accompany said descriptions with a letter from the contractor's independent certified public accountant approving or otherwise commenting on the changes, and

(4) If the agreement is a contract as defined herein, the contractor has filed a statement of management on internal accounting controls as set forth in paragraph (c) below prior to the execution of the contract, and

(5) If the agreement is a contract as defined herein, the contractor has field prior to the execution of the contracts and will continue to file annually, an audited financial statement for the most recent completed fiscal year as set forth in paragraph (d) below.

(c) Every contractor awarded a contract shall file with the awarding authority a statement of management as to whether the system of internal accounting controls of the contractor and subsidiaries reasonably assures that:

(1) Transactions are executed in accordance with management's general and specific authorization;

(2) Transactions are recorded as necessary:

i. To permit preparation of financial statements in conformity with generally accepted accounting principles, and

ii. To maintain accountability for assets;

(3) Access to assets is permitted only in accordance with management's general or specific authorization; and

(4) The recorded accountability for assets is compared with the existing assets at reasonable intervals and appropriate action was taken with respect to any difference.

Every contractor awarded a contract shall also file with the awarding authority a statement prepared and signed by an independent certified public accountant, stating that he/she has examined the statement of management on internal accounting controls, and expressing an opinion as to:

(1) Whether the representations of management in response to this paragraph, and paragraph (b) above are consistent with the result of management's evaluation of the system of internal accounting controls; and

(2) Whether such representations of management are, in addition, reasonable with respect to transactions and assets in amounts which would be material when measured in relation to the applicant's financial statements.

(d) Every contractor awarded a contract by the commonwealth or by any political subdivision thereof shall annually file with the awarding authority and the deputy commissioner of capital planning and operations during the term of the contract a financial statement prepared by an independent certified public accountant on the basis of an audit by such accountant. The final statement filed shall include the date of final payment. All statements shall be accompanied by an account-ant's report. Such statements shall be made available to the awarding authority upon request.

(e) The office of inspector general, the deputy commissioner for capital planning and operations and any other awarding authority shall enforce the provisions of this section. The deputy commissioner of capital planning and operations may after providing an opportunity for the inspector general and other interested parties to comment, promulgate pursuant to the provisions of chapter thirty A such rules, regulations and guidelines as are necessary to effectuate the purposes of this section. Such rules, regulations and guidelines may be applicable to all awarding authorities. A contractor's failure to satisfy any of the requirements of this section may be grounds for debarment pursuant to section forty-four C of chapter one hundred and forty-nine."

(f) Records and statements required to be made, kept or filed under the provisions of this section shall not be public records as defined in section seven of chapter four and shall not be open to public inspection; provided, however, that such records and statements shall be made available pursuant to the provisions of clause (2) of paragraph (b).

Section 40. "Bonds give to the commonwealth, any county, city, town or political subdivision to secure the performance of contracts for the construction or repair of public buildings or other public works may be discharged or released by the awarding authority, upon such terms as it deems expedient, after the expiration of one year from the time of completion, subject to section thirty-nine K, of the work contracted to be done; provided that no claim filed under said bond is pending, and provided further, that no such bonds shall be discharged or released prior to the expiration of all special guarantees provided for in the contract unless new bonds in substitution therefor specifically relating to the unexpired guarantees shall be taken.

EQUAL EMPLOYMENT OPPORTUNITIES

The Contractor and each Subcontractor shall comply with the provisions of the Governor's "Executive Order No. 74", dated July 20, 1970, entitled the "Governor's Code of Fair Practices", as amended by the Governor's "Executive Order No. 116", dated May 1, 1975; with the Fair Employment Practices Law of Massachusetts, as amended; with the Rules and Regulations of the Massachusetts Commission Against Discrimination, as in force at the date hereof; and with all other applicable municipal, state and federal laws and regulation regarding equal employment opportunity.

SECTION 01015

SPECIAL REQUIREMENTS

Supplementing Massachusetts Highway Department
Standard Specifications
Construction Details

SCOPE OF WORK

The estimate total value of this contract is projected to be $2 million depending on available funding. Quantities are indeterminate and are provided only for the purpose of comparing bids. The Town of Dedham reserves the right to increase or decrease the estimated total value of this contract without any changes in the Contractor's unit bid prices.

Work will be at various locations all over Town as directed by the Director of Public Works. The Work consists of various forms of asphalt paving and resurfacing including but not limited to full depth reclaiming, grading and compaction, milling, paving, installation of bituminous and granite curbing, and installation and repair of bituminous and concrete sidewalks, and other miscellaneous work including the excavation and replacement of unsuitable materials as directed by the Director of Public Works or his designee. The Director prior to the commencement of the work will mark the limits and locations of work in the field.

All items of work in this contract shall be in conformance with the "Commonwealth of Massachusetts, Highway Department (MHD) Standard Specifications for Highway and Bridges", dated 1988, including the latest supplements and addendum thereto; the 2012 Construction Standard Details; the Dedham DPW Design & Construction Standards, the 2009 Manual on Uniform Traffic Control Devices and addendum thereto; the 1990 Standard Drawings for Signs and Supports; the 1968 Standard Drawings for Traffic Signals and Highway Lighting; the American Standards for Nursery Stock (ANSI Z 60.1 - 1986); and these Special Provisions.

In addition, the contractor is advised that the most recent revisions to the MHD requirements for the construction of wheelchair ramps dated 2001, including the latest supplements and addendum thereto are made part of these specifications and will govern the construction of wheelchair ramps and sidewalks for this project. The contractor is also advised that these MHD wheelchair ramp standards are shown in Metric units. For the purpose of this contract, all units shall be converted to English units using conversion factors of 3.28084 feet per meter and 0.3048 meters per foot.

CONFLICTS BETWEEN SPECIFICATIONS

Wherever a conflict exists between the Special Provisions, Plans, Supplemental Specifications, or Standard Specifications, the conflict shall be resolved in the accordance with Subsection 5.04, Division I, of the Massachusetts Highway Department Standard Specifications.

CONTRACT REQUIREMENTS & DEFINITIONS

The words “municipal” or “municipality” in this document shall mean the Town of Dedham.

The Standard Specifications, where referred to, shall mean the “Commonwealth of Massachusetts Highway Department (MHD) Standard Specifications for Highways and Bridges", dated 1988, including the latest supplements and addendum thereto. All work items to be performed refer to the Standard Specifications items unless otherwise indicated.

The materials are subject to inspection prior to the awarding of a Contract. All materials shall meet or exceed the requirements as written in the Standard Specifications.

No contract award will be deemed to be legally made until a completed and signed contract is executed. The Contractor shall comply with all state and local laws, ordinances and regulations governing the type of work called for in these specifications, particularly in reference to safety and fire regulations.

The Town of Dedham shall be responsible for providing a work site that is swept clean and ready for the Contractor to perform all work. The Contractor is responsible for leaving the work site in a similar manner.

The Contractor must have a supervisor or foreman available at all times to direct operations. This supervisor or foreman will report to the Town any problems as well as give progress reports.

The Contractor must show by past performance that he is capable of performing a contract of this magnitude and must enclose a list of other contracts he has completed in other cities and towns.

The Contractor agrees not to sublet or assign the Contract in whole or in part without the written approval or the written authorization of the Town. However, nothing contained in this agreement shall create any contractual relationship between a subcontractor and the Town.

SCHEDULE AND SAFETY MEASURES FOR CONSTRUCTION IMPACTS

Work, unless otherwise noted, is restricted to a ten-hour window, five-day week, with the Prime Contractor and all subcontractors working on the same shift. The daily work shift shall begin no sooner than 7:00 A.M. and shall end no later than 5:00 P.M.

No work shall be performed on Saturdays, Sundays, or Holidays without the expressed written approval of the Town and the concurrence of the Chief of Police, except in the situation of On-Call Emergency Services. Such approval shall be requested one week in advance of the date upon which the Contractor wishes to perform work.

The Contract period shall extend to November 1, 2013. All prices submitted by the Contractor shall be fixed for the entire Contract period.

The Contractor shall perform the work to a schedule prepared by the Contractor and approved by the Town. All work shall be scheduled only at times acceptable to the Town. The Contractor shall indicate the amount of time required to perform the work and present a tentative schedule to complete such work (weather permitting).

The Contractor shall schedule the work in a manner that facilitates the completion of work at one location while starting the work at another. Excavation shall be limited to those areas that the Contractor can finish in a reasonable amount of time.

At the end of each workday, all safety control devices shall be in place so that traffic flow can resume and safety is enhanced. It is the Contractor's responsibility to provide all appropriate warning signs, reflectorized drums, flashers, and other safety control devices necessary. Street closures, lane closures, partial lane closures, and detours are all considered part of the traffic management measures required under the Contract.

All traffic management measures shall be implemented in accordance with the drawings and these Special Provisions, and as directed by the Town. The Contractor shall also provide dust control measures using either calcium chloride or water. When directed by the Town, the Contractor shall pave work areas with a bituminous concrete patch to provide for enhanced traffic flow and safety.

Any detours proposed by the contractor must be submitted to the Town, Police and Fire Department of the Town of Dedham at least 72 hours prior to the implementation of the detour. The contractor must receive written approval of the detour prior to the commencement of the scheduled work. Each submitted detour plan shall conform to the relevant section of Part VI of the Manual for Uniform Traffic Control Devices (MUTCD)

QUALIFICATION

The Contractor shall be responsible for payment of prevailing wages for work performed as determined by the Director of Labor and Industries under the provisions of the Massachusetts General Laws, Chapter 149, Sections 26 to 27D.

INSPECTION

One or more inspectors may be assigned by the Town to oversee construction of the work, and shall have the authority to monitor the work. All official orders or directives, which increase the cost of the project, shall be approved by the Town. All extra work orders will require written approval by the Town before performing the work. All costs associated with inspection shall be borne by the Town.

WORK BY OTHERS AND COOPERATION BY THE CONTRACTOR
(Supplementing Subsections 5.05 and 5.06 of the Standard Specifications)

Agents of various Public Service Agencies, Municipal and State Departments may be entering on the work site to remove existing facilities, to construct or place new facilities or to make alterations to existing facilities.

The Contractor shall perform the work in cooperation with the various agencies in a manner, which causes the least interference with the operations of the aforementioned agencies and shall have no claim for delay, which may be due, or result, from said work of these agents.

The Contractor shall be fully responsible for arranging and coordinating his work that is to be performed by others. This coordination and phasing shall be submitted to the Town for his approval.

Work required on all private utilities made necessary by the construction of this project will be accomplished by the respective utility companies. Each utility company shall be responsible for their own safety control including detail officers if required

PUBLIC SAFETY AND CONVENIENCE
(Supplementing Subsection 7.09 of the Standard Specifications)

The Contractor's attention is directed to the fact that work on this project is to be performed on streets, which are utilized by pedestrians as well as by vehicles. The Contractor shall be responsible for the installation of adequate precautions and other safety measures and controls deemed necessary by the Town for the Contractor's own personnel. Any automotive equipment not protected by traffic cones or plastic drums that is working on a public way under this project shall have one amber flashing warning light mounted on the cab roof or in the highest practical point of the machinery. This light shall be in operation while the equipment is so working.

The Contractor shall be required, without additional compensation to provide safe and convenient access to all abutters during the prosecution of the work. Necessary access for fire apparatus and other emergency vehicles shall be maintained at all times. Sweeping and cleaning of surfaces beyond the limits of the project to clean up material caused by spillage or vehicular tracking during the various phases of the work shall be considered as incidental to the work being performed under the Contract and there will be no additional compensation.

CLEANING UP

During its progress, the work and the adjacent areas affected thereby shall be kept cleaned and all rubbish, surplus materials, and unneeded construction equipment shall be removed and all damage repaired so that the public and property owners will be inconvenienced as little as possible.

Where material or debris has washed or flowed into or been placed in existing watercourses, ditches, gutters, drains, pipes structures, or elsewhere during the course of the Contractor's operations, such material or debris shall be entirely removed and satisfactorily disposed of during the progress of the work, and the ditches, channels, drains, pipes, structures, etc., shall, upon

completion of the work, be left in a clean and neat condition.

On or before the completion of the work, the Contractor shall, unless otherwise especially directed or permitted in writing, tear down and remove all temporary buildings and structures built by him; shall remove all temporary works, tools, and machinery or other construction equipment furnished by him; shall remove, acceptably disinfect, and cover all organic matter and material containing organic matter in, under, and around privies, houses, and other buildings used by him; shall remove all rubbish from any grounds which he has occupied; and shall leave the roads and all parts of the premises and adjacent property affected by his operations in a neat and satisfactory condition.

The Contractor shall restore or replace, when and as directed by the Town, any public or private property damaged by his work, equipment, or employees, to a condition at least equal to that existing immediately prior to the beginning of operations. To this end the Contractor shall do as required all necessary highway or driveway, walk, and landscaping work.

Suitable materials, equipment, and methods shall be used for such restoration. The restoration of existing property or structures shall be done as promptly as practicable as work progresses and shall not be left until the end of the Contract period.

PROVISIONS FOR ACCESS AT ALL LOCATIONS
(Supplementing Section 5.09 of the Standard Specifications)

The Contractor shall cooperate with the various utility companies, public agencies and the municipality, and provide access through the site if required for their work or to observe work in connection with this project that affects their respective properties, but all official orders and directives to the Contractor will be issued by the Town or its duly appointed representative.

NOTICE TO OWNERS OF UTILITIES
(Supplementing Subsection 7.13 of the Standard Specifications)

Written notice shall be given by the Contractor to all public service corporations or municipal and State officials owning or having charge of publicly or privately owned utilities of his intention to commence operations affecting such utilities at least one week in advance of the commencement of such operations. The Contractor shall, at the same time, file a copy of such notice with the Town.

Before commencing work on service connections, the Contractor shall be responsible for contacting the Electric Company serving the area to obtain construction requirements, standards, and to give adequate notice of commencement of work. The Contractor's attention is further directed to the requirements of "Work in the Immediate Vicinity of Certain Underground Structures and Utility Poles" herein included in these Special Provisions.

The following are the names of owners of the principal utilities affected, but the Town does not guarantee completeness of this list.

Town of Dedham
Department of Public Works
55 River Street
Dedham, MA 02026
Telephone: (781) 751-9350

COMCAST
55 Concord Street
N. Reading, MA 01864
(978) 207-2351

Dedham Police Department
600 High Street
Dedham, MA 02026
Telephone: (781) 320-8757

Dedham Fire Department
436 Washington Street
Dedham, MA 02026
Telephone: (781) 326-9300

Eversource Electric
One Nstar Way, SW 340
Westwood, MA 02090
Telephone: (781) 441-8925

Verizon
125 Lundquist Drive
Braintree, MA 02148
Telephone: (781) 849-6366

Eversource Gas
One Nstar Way, SW 340
Westwood, MA 02090
Telephone: (781) 441-8937

Dedham Westwood Water District
50 Elm Street
Dedham, MA 02026
Telephone: (781) 329-7090

RCN
201 University Avenue
Westwood, MA 02090
(781) 381-3007

PROTECTION OF UNDERGROUND FACILITIES

Before the Contractor begins any work or operations, which might damage any subsurface structures, he shall carefully locate all such structures and conduct his operations so as to avoid any damage to them.

The Contractor shall make his own investigation to assure that no damage to existing structures, drainage lines, traffic signal conduits, and other utilities will occur as a result of his operations.

The Contractor shall notify "DIG SAFE", 72 hours in advance of any digging, and procure a DIG SAFE number of each location prior to disturbing ground in any way.

"DIG SAFE" Call Center: Telephone 1-888-344-7233

PROTECTION OF UTILITIES AND PROPERTY
(Supplementing Subsection 7.13 of the Standard Specifications)

The Contractor, in constructing or installing facilities alongside or near sanitary sewers, storm drains, water or gas pipes, electric or telephone conduits, poles, sidewalks, walls, vaults, or other structures shall, at his expense, sustain them securely in place, cooperating with the officers and agents of the various utility companies and municipal departments which control them, so that the services of these structures shall be maintained. The Contractor shall also be responsible for the repair or replacement, at his own expense, of any damage to such structure caused by his acts or neglect, and shall leave them in the same condition as they existed prior to commencement of the work.

In case of damage to utilities, the Contractor shall promptly notify the utility owner and shall, if requested by the Town, furnish labor and equipment to work temporarily under the owner's direction in providing access to the utility. Pipes or other structures damaged by the operation of the Contractor may be repaired by the Town or by the utility owner, which suffers the loss. The cost of such repairs shall be borne by the Contractor, without compensation therefore.

If, as the work progresses, it is found that any of the utility structures are so placed as to render it impracticable, in the judgment of the Town, to do the work called for under the contract, the Contractor shall protect and maintain the services in such utilities and structures and the Town will, as soon thereafter as reasonable, cause the position of the utilities to be changed or take such other actions deemed suitable and proper.

If live service connections are to be interrupted by excavations of any kind, the Contractor shall not break the service until new services are provided. Abandoned services shall be plugged off or otherwise made secure. Operation of all existing water system valves shall be by the Dedham-Westwood Water District or as authorized by the same.

Full compensation for furnishing all labor, materials, tools, equipment and incidentals for doing

all the work involved in protecting or repairing property as specified in this section, shall be included in the lump sum price and no additional compensation will be allowed therefore.

WORK IN THE IMMEDIATE VICINITY OF CERTAIN
UNDERGROUND STRUCTURES AND UTILITY POLES

For overhead connections, NSTAR Electric will make the connection from the top of the riser on the utility pole to the power source. The Contractor shall supply all labor, materials and equipment to install the service connection, complete in place and in accordance with NSTAR Electric procedures, from the controller to and including the riser with enough wire coiled above the rise to permit NSTAR Electric to make the final connection.

For underground connections, NSTAR Electric will perform the actual wiring of the service connections from its power source to the sweep at the local controllers but all steel sweeps duct, entrance holes into manholes, patching and all other necessary labor, materials and equipment required to install the electric service, complete in place, shall be furnished by the Contractor.

The Contractor shall pay NSTAR Electric for their services rendered for the connection of overhead and underground service connections.

No work is to be performed in the immediate vicinity of NSTAR Electric manholes or utility poles, or VERIZON manholes or utility poles or conduit system without prior notice (at last 48 hours) to the affected company.

Before starting work at existing manholes, the Contractor shall test for gas and blow out the manholes.

PROVISIONS FOR TRAVEL AND PROSECUTION OF THE WORK
(Supplementing Subsection 8.02 and 8.03 of the Standard Specifications)

Before starting any work under the contract, the Contractor shall submit a Schedule of Operations as provided in Section 8.02. The work schedule shall include a plan of his construction procedures and the safety measures he will use during the prosecution of the work as set forth in Section 850 of the Standard Specifications for Highways and Bridges. This plan shall indicate the temporary barricades, signs, drums, and other traffic control devices to be employed during the period of work to maintain traffic and pedestrian safety. Said plan shall conform to Part VI of the 2009 edition of the MUTCD.

Particular care should be taken to establish and maintain methods and procedures, which will not create unnecessary or unusual hazards to public safety. As necessary and/or as directed by the Town, uniformed traffic police shall be employed for the protection and maintenance of traffic. Reasonable facilities shall be provided by the Contractor for the convenient, safe passage of pedestrians and vehicles through the project, and also to and from properties abutting the site of improvement.

Particular care shall be exercised at all times to establish and maintain such methods of work on any roadway which would interfere with the existing flow of traffic shall be limited to approximately one-half width at any one time. At least one lane in each direction shall be kept open at all times. No detouring of traffic shall be allowed without permission of the Town and the Dedham Police Department.

The Contractor shall give notice in writing to the Town at least seven days in advance of beginning any work affecting the maintenance of traffic where work affects the streets in use by the public. The Contractor must prosecute the work efficiently and with the least possible delay. The Contractor, as shown on the Contract Drawings and as directed by the Town, is responsible for furnishing, erecting, and maintaining the temporary signing of the roadways, and the proper removal of the signs upon the completion of the project. Construction work on the project shall not commence until the construction signing and traffic barriers as described in the Contract Drawings have been installed and approved.

Traffic Control devices required only during working hour operations shall be removed at the end of each working day.

Signs having messages that are irrelevant to normal traffic conditions shall be removed or properly covered at the end of each work period. Signs shall be kept clean at all times and legends shall be distinctive and unmarred. The Contractor shall provide all cones, barrels, barricades, signs, and such other devices as deemed necessary by the Town and in conformance with the traffic management plans prepared by the Town's consultant and Section VI of the MUTCD, as amended.

TRAFFIC OFFICERS

Uniformed Traffic Officers will be required during the construction period. It shall be the responsibility of the Contractor to arrange for the necessary police details after the approval by the Town for each police detail required prior to ordering. This request and approval may be verbal or in writing at the discretion of the Town.

The Town will pay the exact charges for police details directly to the Dedham Police Department for details ordered by the contractor for this project.

If the Contractor fails to cancel any police detail not needed, by the required deadline as set forth by the Dedham Police Department, the cost for such detail as invoiced to the Town shall be deducted from the total reimbursement to the Contractor, unless otherwise waived by the Town due to conditions which are beyond the Contractors control.

WORK COORDINATION AND MEETING WITH ABUTTERS

The Contractor shall coordinate with the Town the scheduling of Public Pre-Construction meetings to be held in the late afternoon, not less than 7 calendar days prior to the start of the work. At the Public Pre-Construction meeting, the Contractor and Town will review the

proposed schedule for the work, provisions for maintaining access to private property and public facilities, and provisions for public safety and traffic control.

TEMPORARY ACCESS TO AREA ABUTTERS
(Supplementing Subsections 8.02 and 8.06 of the Standard Specifications)

The Contractor's attention is directed to the fact that the work is in a predominantly residential and commercial business section of the Town and access to all residences and businesses must be maintained at all times.

The Contractor shall provide a safe and ready means of ingress and egress to all stores and shops, public and private buildings, professional offices and any other business or residence in the project area, both day and night, for the duration of the project.

WORK DONE BY OTHERS

Relocation and/or resetting to new grades of all private utilities, including utility poles, made necessary by the construction of this project, will be accomplished by the respective utility companies.

STORAGE OF MATERIALS AND EQUIPMENT

All excavated materials and equipment to be incorporated in the work shall be placed so as not to injure any part of the work or existing facilities and so that free access can be had at all times to all parts of the work and to all public utility installations in the vicinity of the work. Materials and equipment shall be kept neatly piled and compactly stored in such locations as will cause a minimum of inconvenience to public travel and adjoining owners, tenants and occupants. Excessive stockpiling, as determined by the Town, of excavated materials from construction will not be permitted.

MATERIALS REMOVED AND STACKED

All materials owned by the Town of Dedham and directed to be removed and stacked shall be carefully removed, transported and stacked (on boards) to a location within Town limits, to be determined by the Dedham Department of Public Works.

The Contractor shall be held responsible for any damage to the stacked materials before final removal. The contractor's responsibility shall cease upon final acceptance of the work or 60 days from the time a certified notice (with a copy sent to the Town) is sent to the owner of the material advising him that it is available for removal.

If the Town determines that any part of the stacked material is unsuitable for reuse, or if other owners decide to abandon part or all of such materials, said materials shall become the property of the Contractor, and he shall dispose of them away from the site.

DISPOSAL OF SURPLUS EXCAVATED MATERIALS

Surplus materials obtained from any type of excavation, and not needed for further use as determined by the Town, and not wanted by Town or owner, shall become the property of the Contractor and shall be legally disposed of by the Contractor outside the location subject to the regulations and requirements of local authorities governing the disposal of such materials, at no additional compensation.

COMPUTATION OF QUANTITIES

For estimating quantities in which the computation of areas by geometric methods would be comparatively laborious, it is agreed that the planimeter shall be considered as an instrument of precision adapted to the measurement of such areas.

It is further agreed that the computation of volume of prismoids shall be by the method of average end areas.

TEMPORARY FACILITIES

The Contractor shall provide all Temporary Facilities necessary for the proper completion work, as necessary and as specified.

The Contractor's attention is directed to the requirements specified under the following sections:

- Water Supply
- Sanitary Regulations
- Drainage & Sewer Systems
- Protection Against High Water and Storm
- Temporary Heat
- Precautions during adverse weather
- Electrical Energy
- Precautions Under Electrical Lines
- Pavement Markings

All costs associated with providing Temporary Facilities that required completing the work under the contract should be included in the various Contract unit prices. No additional compensation will be made for Temporary Facilities under the contract.

WATER SUPPLY

The Contractor shall obtain water from an approved source for all necessary operations at the site of the work, without charge therefore.

The Town of Dedham does not own the public water supply or distribution system in the Town of Dedham. All issues concerning public water supply shall be addressed to the Dedham-

Westwood Water District.

SANITARY REGULATIONS

The Contractor shall provide adequate sanitary facilities for the use of those employed on the Work. Such facilities shall be made available when the first employees arrive on the site of the Work, shall be properly secluded from public observation, and shall be constructed and maintained during the progress of the Work in suitable numbers and at such points and in such manner as may be required.

The Contractor shall maintain the sanitary facilities in a satisfactory and sanitary condition at all times and shall enforce their use. He shall rigorously prohibit the committing of nuisances on the site of the Work, on the lands of the Owner, or on adjacent property.

TEMPORARY HEAT

If temporary heat is required for the protection of the Work, the Contractor shall provide and install suitable heating apparatus, shall provide adequate and proper fuel, and shall maintain heat as required.

PRECAUTIONS DURING ADVERSE WEATHER

During adverse weather and against the possibility thereof, the Contractor shall take all necessary precautions so that the Work may be properly done and satisfactory in all respects. When required, protection shall be provided by use of tarpaulins, wood and building-paper shelters, or other suitable means.

During cold weather, materials shall be preheated, if required, and the materials and adjacent structure into which they are to be incorporated shall be made and kept sufficiently warm so that a proper bond will take place and a proper curing, aging, or drying will result. Protected spaces shall be artificially heated by suitable means, which will result in a moist or a dry atmosphere according to the particular requirements of the work being protected. Ingredients for concrete and mortar shall be sufficiently heated so that the mixture will be warm throughout when used.

ELECTRICAL ENERGY

The Contractor shall make all necessary applications and arrangements and pay all fees and charges for electrical energy for power and light necessary for the proper completion of the Work and during its entire progress. The Contractor shall provide and pay for all temporary wiring, switches, connections, and meters.

The Contractor shall provide sufficient electric lighting so that all work may be done in a workmanlike manner when there is not sufficient daylight.

DRAINAGE & SEWER SYSTEMS

The Contractor shall maintain the drainage system in the project areas to provide continual drainage of the travel ways and construction area.

It shall be the responsibility of the Contractor to repair or clean any drainage and sewer systems, which have been fouled by the Contractor's operations without additional compensation therefore.

Contractor shall accept responsibility for cleaning sewer and storm drain lines of construction related debris caused by his their activities.

All pipes and structures installed, as part of the contract shall be left in a clean and operable condition at the completion of the work.

No separate payment will be made for the maintenance of the drainage and sewer systems, but all costs in connection therewith shall be included in the unit price bid for the various Contract items.

The proposed storm water system shall be completed prior to the commencement of any other work in the contract. It is the contractor's responsibility to ensure that there be no more than a 2" difference between the existing grade and interim storm sewer grate or rim. Proposed storm sewer grates and rims shall be set to final grade no more than 72 hours prior to final paving.

The inverts and slopes of the proposed storm water system are based on utility information available to the Town at the time of design, and may vary due to conditions discovered during construction. It is the contractor's responsibility to field verify all inverts prior to construction of the storm sewer system. Exploratory excavation that is required to determine a conflict between the existing utilities and the proposed storm sewer system shall be paid for under Item 141.1 - Test Pit for Subsurface Structures.

Construction of the proposed storm water system shall begin at the lowest invert, and proceed upstream.

PROTECTION AGAINST HIGH WATER AND STORM

The Contractor shall take all precautions to prevent damage to the work or equipment by high waters or by storms. The Town may prohibit the carrying out of any work at any time when in his judgment, high waters or storm conditions are unfavorable or not suitable, or at any time, regardless of the weather, when proper precautions are not being taken to safeguard previously constructed work or work in progress.

In case of damage caused by the failure of the Contractor to take adequate precautions, the Contractor shall repair or replace equipment damaged and shall make such repairs or rebuild such parts of the damaged work, as the Owner require, at no additional expense to the Owner.

HYDRAULIC UPLIFT OF STRUCTURES

The Contractor shall be responsible for the protection of all structures against hydraulic uplift until the Owner has finally accepted such structures.

COVERING EXCAVATED TRENCH

The Contractor shall cover all open excavations when he suspends operations at the end of the day, or in excavated trenches where work is not actually in progress. This cover shall be capable of withstanding AASHTO HS-20 loading and consist of steel plates or some other satisfactory cover of adequate size and strength suitably held in place to keep all traffic out of excavations, all as verified in writing by the Contractor. The cover shall be laid over the excavation until it is backfilled.

For any excavation expected to be in place longer than overnight, an appropriate fillet of bituminous concrete shall be installed to create a smooth transition from the road surface to the top of the plate.

The Contractor shall provide all appropriate warning signs, reflectorized drums, flashers, and other necessary safety control devices as directed by the Town. At the end of each day, all safety control devices shall be in place so that traffic flow can resume and safety is enhanced.

BRICKS FOR DRAINAGE APPLICATION

Clay brick conforming to Section M4.052 of the Standard Specifications shall be used to adjust all manholes and catch basins frames, and grates or covers, to grade.

COMMUNICATIONS

During paving operations, the Contractor shall provide continuous radio communication between the bituminous concrete plant and the project to ensure immediate response due to breakdowns, emergencies such as accidents, and to ensure the best quality results possible.

PROPERTY BOUNDS

The Contractor shall exercise due care when working around all property bounds, which are to remain. Should damage or displacement to a bound result from action of the Contractor, the bound shall be replaced and/or reset to it’s intended position by a licensed Professional Land Surveyor at no cost to the Owner.

PAVEMENT MARKINGS

All permanent pavement markings on public ways shall be thermoplastic unless otherwise noted on the drawings or elsewhere in these Special Provisions.

The Contractor shall provide all temporary pavement markings as may be necessary or as directed by the Town. Payment for pavement markings shall be made at the Contract unit price for the related item actually used.

PROTECTION OF WORK IN PROGRESS

The Contractor shall be fully responsible assuring the final appearance of cement concrete sidewalks during the process of the work. The Contractor shall post workers at the locations of concrete sidewalk after they are freshly placed and finished and until such time that the concrete has set and is hard to the point were it can not be easily vandalized.

Additionally the Contractor shall keep the work areas at all locations clean of debris, dust and all excavated materials. Each working location shall be kept swept clean by the Contractor during all phases of construction and after the work is complete.

SAWING AND SEALING PAVEMENT AND SIDEWALK JOINTS

All edges of excavations made in existing pavements and sidewalks shall be squared by saw cutting with power driven tools to provide a neat, clean edge for joining new pavement or sidewalks. The work under this item shall include the sawing of both bituminous and cement concrete pavements and sidewalks. The Town prior to commencing work shall approve saw-cut equipment.

In areas where an existing pavement or sidewalk abuts a building, wall, or storefront and is to be reconstructed, the saw-cut shall be a minimum of six (6) inches from the building wall or storefront unless otherwise directed by the Town.

All transverse joints, and all longitudinal joints between new bituminous pavement and existing pavement to remain, shall be coated with a hot poured rubberized asphalt sealant meeting the requirements of Federal Specifications Number SS-S1401. Saw-cut surfaces in roadway areas shall be treated as specified under Subsection 460.65 of the Standard Specifications, or as directed by the Town. Rubberized asphalt sealant will not be required for temporary patches.

DRAINAGE & SEWER STRUCTURE CASTINGS AND GRANITE CURB

Within 30 calendar days after the award of the Contract, the Contractor shall forward to the Town written evidence that the drainage structure frames, covers and grates, and the granite curb necessary to complete the work have been ordered from a reputable supplier or manufacturer.

Upon the receipt of a notice of proposed delivery from the supplier or manufacturer, the Contractor shall forward a copy of such notification to the Town. Failure to comply with the above will nullify any request for extension of the project completion date because of late delivery.

INCREASED OR DECREASED CONTRACT QUANTITIES

(Supplementing Subsection 4.06 of the Standard Specifications)

This subsection changed to read as follows:

The Town reserves the right to increase or decrease the quantity of any item of work.

Unit prices provided in the Contract Proposal will be used to determine the total added cost or credits for modifications of the work performed on a unit price basis when such work is authorized in advance by the Town. The items shall include furnishing and installing, complete in place, the specified item to the satisfaction of the Town, and in accordance with the Plans, Standard Specifications and Special Provisions.

No allowances will be made for loss of anticipated profits suffered or claimed by the Contractor resulting directly or indirectly from such increased or decreased quantities or from unbalanced allocation among the Contract items from any other cause. If the quantity variation is such as to cause an increase in the Contract Time, the Contractor shall demonstrate the impact by analysis of the currently accepted Progress Schedule to the satisfaction of the Town. If the Town, through schedule analysis, determines that the Contract time should be adjusted, the Town shall within ten (10) days from the receipt of such an analysis, ascertain the facts and put into effect any necessary arrangements for Town approval of the extension of the Contract Time as in its judgment the findings justify.

CONTRACT RETAINAGE
(Supplementing Subsection 9.04 of the Standard Specifications)

The Contractor shall guarantee the completed job relative to workmanship and material for one year from date of project acceptance by the Town.

There will be a retainage of ten (10%) percent of the value of all planting items. For all other items of work there will be retainage of five (5%) percent of the value of all the items of work, excluding planting items. The Town will hold the above retainage for a period of one (1) year from the date of satisfactory completion of the work.

PRECAUTIONS UNDER ELECTRIC LINES

The Contractor's attention is directed to the AASHTO Guide on Occupational Safety on Highway Construction Projects, Subpart N, 1926.550, relating to construction equipment clearances at overhead electric lines, which states in part "...the minimum clearance between the lines and any part of the crane or load must be at least ten feet from lines rated 50 KV or below, and greater distances for higher voltage..."

For the protection of personnel and equipment, the Contractor shall be aware of this regulation especially during paving operations using large semi-trailer vehicles.

CONSTRUCTION IN VICINITY OF SCHOOLS

Town of Dedham
Board of Selectman
Policy Directive #13

Intent of Policy

The safety of school children, teachers, and parents is of highest priority to the Town of Dedham. As a result, it is imperative that no road, sewer, storm drain, or sidewalk construction or reconstruction be undertaken in close proximity to a school building while children are entering and exiting the school property unless of an emergency nature. The intent of this policy is to establish guidelines for town and private contractors who undertake construction projects in the vicinity of school buildings for the purpose of protecting the safety of students, teachers, and parents.

Policy Provisions

1. All bid documents and contracts relating to town-funded road, sewer, storm drain or sidewalk construction or reconstruction within 500 feet of a school shall prohibit construction activity for the period one-half hour before and after the arrival and departure of students on any day that school is in session.
2. All Street Opening Permits issued by the Director of Public Works to private parties or contractors for road, sewer, storm drain or sidewalk construction or reconstruction within 500 feet of a school shall prohibit construction activity for the period one-half hour before and after the arrival and departure of students on any day that school is in session.
3. Exceptions to policy provisions 1 and 2 above may be granted by the Director of Public Works if emergency circumstances threaten the health and safety of the public. In such cases, the Director shall ensure that proper measures are implemented to protect the safety of children, teachers and parents.

SECTION 01025

MEASUREMENT AND PAYMENT

ITEMS

All items of work in this Contract shall be governed by the "Commonwealth of Massachusetts, Highway Department (MHD) Standard Specifications for Highway and Bridges", dated 1988, including the latest supplements and addendum thereto.

The following items reflect special conditions particular to this Contract. As such, they amend and/or supplement the provisions governing the item as described in the Standard Specifications.

ITEM 100.12	**FRONT END LOADER & OPERATOR**	**PER HOUR**
ITEM 100.15	**GRADALL & OPERATOR**	**PER HOUR**

Work under this item is intended for miscellaneous equipment rental and shall include all costs for furnishing equipment including operator, fuel, and required insurance at the bid price per hour. Hourly cost includes transportation cost to and from Dedham.

Weekend or night work if necessary, will be compensated at the prevailing rate plus one half time rate for the operator. This will only be allowed in certain instances with prior permission and will not be allowed when it is a normal scheduled work that can be done during normal hours.

Front end loaders shall have at least a 4 CY capacity. Gradall shall be a Gradall 2300 or equivalent. Excavator shall be a CAT 330 or equivalent sized excavator.

Payment

Payment for work under this item shall be made at the Contract unit bid price per hour for miscellaneous work specified by the owner and for work not covered under any other item in this contract document.

ITEM 120.1	**UNCLASSIFIED EXCAVATION**	**CUBIC YARD**

Work under this item shall conform to the relevant provisions of Section 100 of the Massachusetts Highway Department 1988 Standard Specifications for Highways & Bridges, the latest supplements and addendum thereto, and the following:

The work under this item is intended for excavations not covered under any other item as indicated in the payment at the end of each item.

All excavations that are paid for under this item or included in other items consist of removing and disposing all materials required for execution of the required work as shown and as directed

by the Town. The Town shall determine the disposition of all materials with respect to reuse, disposal, or stacking.

Edges of excavations made in existing pavements shall be squared by saw cutting with power driven tools to provide a neat, clean edge for joining new pavement as shown on the detail. Ragged, uneven edges shall not be accepted. Pavement areas, which have been broken or undermined, shall be edged neatly with a minimum disturbance to the remaining pavement. Saw-cutting pavements and sidewalks will be considered incidental to the applicable items that requires saw cutting, no additional payment will be made.

Foundations left in place under roadway surfaces shall be removed to a minimum depth of 3 feet below finished grade; all other foundations left in place shall be removed to a depth of 12 inches below finished grade. The area shall be restored to match the existing or proposed grade with materials similar in kind to the abutting materials and will be paid for under the pertinent items. Such foundations to be abandoned shall be filled with Controlled Density Fill to the level specified above.

The Contractor shall perform all excavation in such a manner as to maintain slopes, longitudinally and laterally and to insure proper and continuous drainage at all times.

To avoid damage to trees which have parts of their root system in roadways, sidewalks or planting areas designated for excavation, such excavation shall be accomplished as carefully as possible and as directed by the Town. Trimming and watering of fine roots for tree protection is required and shall be considered incidental to this item and no additional payment would be made therefore.

Removal and disposal of trees and their stumps having a shortest diameter of 9 inches to 24 inches shall be paid for under Item 103.

All work relating to clearing and grubbing, and removal of trees and stumps having a shortest diameter of less than 9 inches in diameter, shall be performed in accordance with Section 101 of the Standard Specifications, of which payment shall be made under Item 120.1. Unclassified Excavation.

Payment

Payment for excavations and disposal under this item shall be made at the Contract unit bid price per cubic yard for work not covered under any other item in this contract document as described above.

ITEM 129. ASPHALT PAVEMENT EXCAVATION BY COLD PLANER **SQUARE YARD**

Work under this item shall conform to the relevant provisions of Section 100 of the Massachusetts Highway Department 1988 Standard Specifications for Highways & Bridges, the latest supplements and addendum thereto, and the following:

The work under this item is specifically designated for cold planing that is located at various locations through out the town as directed by the Director of Public Works.

The work shall include the cold planning of existing asphalt pavement surface to various depths to produce a uniform surface for the application of the pavement overlay, as directed by the Town.

Pavement areas abutting utility structures and other areas, which cannot be planed by the principal cold planning machine, shall be excavated by manual methods. Payment shall be paid separately under Item 129.2 Old Pavement Excavation.

No cold-planed asphalt cuttings shall remain on the project at the end of each workday, except as might be acceptable for base at the approval of the Town. Cold-planed materials are the property of the Town of Dedham; the Town of Dedham may direct the contractor to transport the cold-planed material to other sites within the Town for reuse at no extra cost to the Town. If the Town does not choose the use of the cold-planed materials, the cold-planed materials shall become the property of the Contractor and shall immediately be removed from the site at the contractor's expense.

All surfaces, which have been cold-planed, shall be swept clean to remove smaller shavings prior to the opening of the roadway or section of the roadway to traffic. No additional payment will be made for sweeping and cleaning of the cold-planed areas.

Hot Mix Asphalt installation shall be as directed.

Payment shall be paid for separately under Item 460. Hot Mix Asphalt Pavement.

<u>Payment</u>

Payment for work under this item shall be made at the Contract unit bid price per square yard and shall include full compensation for furnishing all labor, material and equipment, removal and disposal of unwanted material, sweeping and cleaning of the planed areas, and any other incidental items necessary for the satisfactory completion of this work as specified.

ITEM 129.2 OLD PAVEMENT EXCAVATION SQUARE YARD

Work under this item shall conform to the relevant provisions of Section 100 of the Massachusetts Highway Department 1988 Standard Specifications for Highways & Bridges, the latest supplements and addendum thereto, and the following:

The work under this item is specifically designated for existing pavement that is to be removed by methods other than cold planning at various locations throughout the town. Work shall include the removal of the existing asphalt pavement surface to its full depth. Removed material shall become the property of the Contractor and shall immediately be removed from the site and disposed of legally.

If the Town deems that additional base material is needed, the Contractor shall place dense graded crushed stone to the limits directed by the Town. Payment shall be paid for separately under Item 402. Dense Graded Crushed Stone for Sub-Base.

The subgrade shall be shaped to a true surface conforming to the existing cross section of the roadway, or as directed by the Town. Payment shall be paid for separately under item 170. Fine Grading and Compacting.

Hot Mix Asphalt installation shall be as directed.

Payment shall be paid for separately under Item 460. Hot Mix Asphalt Pavement.

Payment

Payment for work under this item shall be made at the Contract unit bid price per square yard and shall include full compensation for furnishing all labor, material and equipment, removal and disposal of unwanted material, sweeping and cleaning of the areas, and any other incidental items necessary for the satisfactory completion of this work as specified.

ITEM 201.5 PRE-CAST CONC. CATCH BASIN (TOWN STANDARD) EACH
ITEM 202.01 PRE-CAST CONC. DRAIN MANHOLE (TOWN STANDARD) EACH
ITEM 204. GUTTER INLET EACH
ITEM 205. LEACHING BASIN (TOWN STANDARD) EACH

Work under these items shall conform to the relevant provisions of Sections 200 of the Massachusetts Highway Department 1988 Standard Specifications for Highways & Bridges, the latest supplements and addendum thereto, and the following:

All proposed catch basins and manholes shall be constructed in accordance to the Dedham DPW Design & Construction Standards (see Attachment A).

All new basins shall have sumps as shown on the construction standards.

The Contractor shall provide a protected work area around the utility structure work areas while maintaining a lane of traffic in each direction and provisions for maintained and protected pedestrian crossings throughout the duration of the drainage and utility work. The active work zone shall not remain in place during overnight non-work hours. The contractor shall backfill and or steel plate over all open excavations associated with this work for overnight conditions. All traffic control devices will be inspected at the end of each workday to assure proper device spacing, location, visibility and flashing lights in working order in accordance with the 2003 Manual on Uniform Traffic Control Devices. Payment for all maintenance of traffic and work zone protection elements required for this operation shall be paid for separately under Item 851. Safety Controls for Construction Operations.

Where new catch basins or manholes to be constructed at the direction of the Town over existing pipes, the work under Items 201.5, 202.01, and 204. shall also include the connecting of the pipe to the structures and the necessary cutting and removal of the existing pipe within the structures.

The existing pipe shall be neatly cut to provide a smooth uniform face flush with the inside wall surface of the structure and totally removed or neatly cut longitudinally and partially removed to retain the lower half of the existing pipe barrel to form the required (manhole) shaped invert. If this "dog house" type structure is constructed, an adequate bottom will be required using plates or poured concrete.

Installation of specified oil and grease trap (hood) in each catch basin is considered incidental to that item.

Payment

Payment for work under these items shall be made at the Contract unit bid price per each and shall include full compensation for furnishing all labor, materials and equipment, excavations to the depth required for completing the work, gravel borrow Type "B" for backfill, and any other incidental items for the satisfactory completion of this work as specified.

Frames and grates (or covers) shall be paid for separately under Item 222.3 Frame and Grate (or Cover) Town Standard (Furnish, Deliver & Install) and Item 222.31 Frame and Grate (or Cover) Town Standard (Transport & Install)

ITEM 220.	**DRAINAGE STRUCTURE ADJUSTED**	**EACH**
ITEM 220.2	**DRAINAGE STRUCTURE REBUILT**	**VF**
ITEM 220.5	**DRAINAGE STRUCTURE REMODELED**	**EACH**
ITEM 220.6	**SANITARY STRUCTURE REBUILT**	**VF**
ITEM 220.7	**SANITARY STRUCTURE ADJUSTED**	**EACH**
ITEM 220.8	**SANITARY STRUCTURE REMODELED**	**EACH**

Work under this item shall conform to the relevant provisions of Section 200 of the Massachusetts Highway Department 1988 Standard Specifications for Highways & Bridges, the latest supplements and addendum thereto, and the following:

All structure adjustments and rebuilds shall comply with the Dedham DPW Design & Construction Standards. All castings, including gate boxes, located within the pavement area shall not be set to finish grade until after the binder course has been placed.

The brick for structure adjustment and rebuilding shall be sound, hard and uniformly burned brick, regular and uniform in shape and size, of compact texture and satisfactory to the Town. Brick shall comply with ASTM Standard Specifications for sewer brick (made from clay or shale), Designation C-32-63 or Grade SA, hard brick, except that the mean of five tests for absorption shall not exceed 8 percent by weight. Rejected brick shall be immediately removed from the work site and brick satisfactory to the Town substituted.

Payment

Payment for work under this item shall be made at the Contract unit bid price per each or per vertical foot as indicated above, and shall include full compensation for furnishing all labor, materials and equipment, excavations, and any other incidental items for the satisfactory completion of this work as specified.

ITEM 222.2 FRAME AND GRATE (OR COVER) TOWN STANDARD (FURNISH, DELIVER & INSTALL) EACH

Work under this item shall conform to the relevant provisions of Section 200 of the Massachusetts Highway Department 1988 Standard Specifications for Highways & Bridges, the latest supplements and addendum thereto, and the following:

The work under this item is specifically designated for the furnishing, delivering and installing of frames and grates (or covers) at locations specified by the Town.

Catch basin frames and grates shall be as manufactured by Le Baron Foundry Catalog number LF248-2 (3 flange) or 4 flange, as required, or an approved equal.

Drain manhole or sanitary manhole frames and covers shall be as manufactured by Le Baron Foundry Catalog number LK110 or approved equal. Covers shall be supplied with the appropriate name “DRAIN” or “SEWER” printed on it in accordance to the Dedham DPW Design & Construction Standards (see Attachment A). All casting shall be manufactured in accordance with M8.03.0 iron castings to the dimensions provided on the plans

Payment

Payment for work under this item shall be made at the Contract unit bid price per each and shall include full compensation for furnishing, delivering and installing, and for furnishing all labor,

materials and equipment, and any other incidental items for the satisfactory completion of this work as specified.

ITEM 222.21 FRAME AND GRATE (OR COVER) TOWN STANDARD (TRANSPORT & INSTALL) EACH

Work under this item shall conform to the relevant provisions of Section 200 of the Massachusetts Highway Department 1988 Standard Specifications for Highways & Bridges, the latest supplements and addendum thereto, and the following:

The work under this item is specifically designated for the transporting and installing of frames and grates (or covers) as supplied by the Town of Dedham.

The work shall including transporting frames and grates (or covers) from the Dedham DPW yard and installing them at locations as specified by the Town.

Payment

Payment for work under this item shall be made at the Contract unit bid price per each and shall include transporting from the Dedham DPW yard and installing them at locations as specified by the Town, and for furnishing all labor, materials and equipment, and any other incidental items for the satisfactory completion of this work as specified.

ITEM 223.2 FRAME AND GRATE (OR COVER) REMOVE & DISCARD EACH

Work under this item shall conform to the relevant provisions of Sections 220 of the Massachusetts Highway Department 1988 Standard Specifications for Highways & Bridges, the latest supplements and addendum thereto, and the following:

Existing frames and grates or covers deemed unsuitable by the Town shall become property of the contractor and shall be legally disposed of off site.

Payment for the removal and disposal of unsuitable or abandoned material shall be paid for separately under Item 120.1 Unclassified Excavation. Payment for the removal and stacking of frames and grates or covers from drainage structures to be removed shall be paid for separately under Item 146. Drainage Structure Removed.

Payment

Payment for work under this item shall be made at the Contract unit bid price per each and shall include full compensation for furnishing all labor, materials and equipment, and the legal disposal of the frames and grates or covers, and any other incidental items for the satisfactory completion of this work as specified.

ITEM 225.52 TRAP AND HOOD (TOWN STANDARD) EACH

Work under this item shall conform to the relevant provisions of Sections 220 of the Massachusetts Highway Department 1988 Standard Specifications for Highways & Bridges, the latest supplements and addendum thereto, and the following:

Trap and Hood shall be model 18R Snout Oil & Debris Trap as manufactured by LeBaron Foundry, Inc., or approved equivalent.

Payment

Payment for work under this item shall be made at the Contract unit bid price per each and shall include full compensation for furnishing all labor, materials and equipment, and any other incidental items for the satisfactory completion of this work as specified.

ITEM 403. RECLAIMED PAVEMENT FOR BASE COURSE AND/OR SUB-BASE SQUARE YARD

Work under this item shall conform to the relevant provisions of Section 403 of the Massachusetts Highway Department 1988 Standard Specifications for Highways & Bridges, the latest supplements and addendum thereto, and the following:

Removal and disposal of unsuitable material, surplus reclaimed material, or any sub-base/subgrade material necessary for grade changes shall be paid for at the contract unit price per cubic yard for Item 120.1, Unclassified Excavation only when removed and disposed of by the contractor. Loading of Town owned or contracted vehicles for disposal by the Town with unsuitable material, surplus reclaimed material, or any sub-base/subgrade material necessary for grade changes shall be considered incidental to this item and no additional compensation will be allowed.

Grading and compacting the sub-base and/or subgrade resulting from the removal of surplus reclaimed material shall be considered incidental to this item and no additional compensation will be allowed.

ITEM 460.01 ASPHALT PAVEMENT-MARSHALL MIX TON
ITEM 460.02 ASPHALT PAVEMENT-SUPERPAVE TON

Special Notice to Bidders

The bidder's attention is directed to the following:

The Town reminds all bidders that they are required to call the Department of Public Works to schedule inspection of newly placed asphalt. Failure to contact the Department shall result in material rejection and the Contractor shall be required to remove and replace all material at no additional cost to the Town.

The Contractor shall assume that ALL asphalt in this contract be produced as Warm Mix Asphalt unless otherwise directed by the Engineer.

1.0 DESCRIPTION

1.1 Scope - Work under this item shall consist of furnishing asphalt composed of mineral aggregate and asphalt binder, mixed in a central mixing plant and placed on a prepared course in accordance with these specifications and conformance to the lines, grades, thickness and typical cross sections shown on the plans or as directed by the Engineer. Where reference is made to MHD Standard Specifications, Form 1995 shall apply for section references; latest edition shall apply for specifications.

Each course shall be constructed to the depth, typical section, or elevation required by the contract and/or plans, or as directed and shall be rolled, finished, and approved before the placement of the next course. Each course shall be placed to a smooth, dense and uniform appearance.

Many state agencies are implementing Quality Assurance specifications. It is the intent of these municipal quality-based WMA/HMA specifications to move toward the goal of quality assurance implementation but tailored toward the real world of municipal construction. To that end, the Contractor is required to establish, provide, and maintain a Quality Control System (QCS) that will detail the methods and procedures that will be taken to assure that all materials and completed construction conform to project specifications, plans, technical specifications and other requirements, whether manufactured or processed by the Contractor or procured from subcontractors or vendors.

2.0 QUALITY ASSURANCE

The Contractor assumes the responsibility of the quality for all materials and construction incorporated into the work and will control all the processes leading to the final result through this function. Quality Control activities should include:

Maintain a Contractor Quality Control System

Proficiency testing prior to/during production with Engineer

Inspection and Testing of Asphalt Production

Inspection and Testing of Asphalt Placement

See Section 7.16 "Contractor Quality Control of WMA/HMA Pavement" of these specifications for additional information.

The Town of Dedham or their authorized agent will perform the Quality Acceptance function for

this work. Material will be considered for acceptance through a sampling, testing and inspection program performed by the Engineer or their agent. Quality Acceptance activities include:

Proficiency testing prior to/during production with Contractor,

Inspection of WMA/HMA Production Plant and Testing Laboratory.

Production Trials of WMA/HMA Products Intended for Use in the Town of Dedham or approved, current MHD job mix formulas and related Marshall approved design.

Inspection/Testing for Acceptance of Asphalt Production

Inspection/Testing for Acceptance of Asphalt Placement

WMA/HMA Quality Acceptance Report of Activities

3.0 MATERIALS

3.1 Aggregate - Aggregate shall meet the requirements of MHD M3.11.04 latest edition of the Standard Specifications and as further stipulated herein.

A. Coarse Aggregate

1. The sodium sulfate soundness loss shall not exceed nine (9) percent, nor the magnesium soundness loss exceed twelve (12) percent, after five cycles, when tested in accordance with AASHTO T104.

2. The coarse aggregate shall not contain more than one (1) percent of material such as crusher dust, sand or soft, disintegrated pieces. The coarse aggregate shall not contain more than ten (10) percent, by weight, of flat or elongated pieces, when tested in accordance with ASTM D4791 at a ratio of 3:1.

3. The aggregate shall contain a minimum coarse aggregate angularity of 75% having at least one fractured face for the base, intermediate courses and surface course, when tested in accordance with ASTM D5821.

4. The use of steel slag or blast furnace slag shall not be permitted as a coarse aggregate.

B. Fine Aggregate

1. Fine aggregate shall consist of clean, sound, durable, angular particles produced by crushing natural stone, or gravel that meets the requirements for wear and soundness specified for the coarse aggregate. The aggregate particles shall be free from coatings of clay, silt, or other objectionable matter and shall contain no clay balls. The combined materials that passed the No. 100 mesh sieve shall not have sufficient plasticity to permit the performing of the plastic limit test using AASHTO T90.

2. Fine aggregates shall have sand equivalent values of 40 or greater when tested in accordance with AASHTO T176. The sand equivalent value shall be determined for the combined mix aggregates, including coarse and fine aggregates and mineral filler portions.

3. Natural (non-manufactured) sand may be used to obtain the gradation of the aggregate blend or to improve the workability of the mix. The amount of sand to be added will be adjusted to produce mixtures conforming to requirements of this specification.

C. Mineral Filler: If filler, in addition to that naturally present in the aggregate, is necessary, it shall meet the requirements of AASHTO M17.

WMA/HMA mixtures shall contain a dust to effective asphalt ratio by mass between 0.6 and 1.2. For Superpave designed mixtures, mixtures that pass beneath the Primary Control Sieve (PCS) control point established by AASHTO M323 may contain a dust to effective asphalt ratio by mass between 0.8 and 1.6.

D. Reclaimed Asphalt Pavement (RAP) The use of a maximum of 15% recycled asphalt pavement (RAP) will be allowed in the WMA/HMA surface courses. All other WMA/HMA mixtures may contain a maximum of 25% RAP by mass of the entire mixture.

The RAP, incorporated into the WMA/HMA mixtures, shall be maintained as a separate captive stockpile and shall not be added to without prior approval. RAP shall consist of asphalt pavement recovered by cold milling or other removal techniques. The RAP shall be crushed so that 100 percent passes the maximum aggregate size of the WMA/HMA mix in which it will be used. The Contractor's Quality Control system shall assure that the RAP is free from detrimental amounts of contaminating substances such as joint seal compound and, is reasonably uniformly graded from fine to coarse.

The coarse aggregate in the RAP shall be crushed stone or crushed gravel and the top-size shall not exceed the maximum aggregate size established by the JMF. The final WMA/HMA mixture containing RAP shall conform to all the specification requirements contained herein.

For mixtures containing 15% or less RAP, the asphalt binder shall be a PG 64-28 or PG 64-22. For mixtures containing greater than 15% and up to 25% RAP, the asphalt binder grade shall be a PG 58-34, or that which satisfies AASHTO MP1 and AASHTO MP2.

The laboratory RAP-virgin binder blend viscosity value established from the RTFO residue at 140°F (60°C) shall establish the maximum viscosity allowed for the binder after discharge from the WMA/HMA plant and/or silo storage, if applicable, when recovered by AASHTO T170 and tested in accordance with AASHTO T202 and AASHTO TP48.

For design purposes, the specific gravity of the combined aggregate blend with RAP used in a WMA/HMA mixture shall be determined in accordance with the test method for BULK SPECIFIC GRAVITY OF AGGREGATE BLENDS WITH RAP (contact Town if a copy of this test method is needed).

3.1.1 Sampling and Testing - All aggregate samples required for testing shall be furnished by the Contractor when requested. AASHTO-T2 shall be used in sampling coarse aggregate and fine aggregate, and AASHTO T127 shall be used in sampling mineral filler. All tests for initial aggregate submittals necessary to determine compliance with requirements specified herein will be conducted by the Contractor under their Quality Control System. No aggregate shall be used in the production of mixtures without prior approval.

3.1.2 Sources of Supply - Previously approved MHD sources shall be used. Contractor to document MHD approvals.

3.2 Asphalt Binder Material - The types, grades, and controlling specifications, the maximum mixing temperatures and compaction temperatures for the asphalt binder materials shall conform to the following:

3.2.1 Performance Graded Asphalt Binder: - The Asphalt Binder shall be a Performance Graded Asphalt Binder (PGAB) which meets the specification requirements of AASHTO M320 and AASHTO R29. Acceptance of the PGAB will be in accordance with AASHTO R26 “Standard Practice for Certifying Suppliers of Performance Graded Asphalt Binders”. PGAB shall be provided by an Approved Supplier (AS) under the Approved Supplier Certification (ASC) system.

THE PGAB GRADE SELECTED FOR THIS WORK IS PG 64-28 or 64 -22 - If heavy truck traffic and high volume traffic levels warrant, the PGAB may be adjusted by the Engineer for the Town of Dedham traffic conditions.

1. A separate JMF with TSR results shall be submitted for each PGAB grade proposed for use on this project.

2. Limit one binder grade per production day unless otherwise adjusted by the Engineer for the Town of Dedham traffic conditions.
3. Documentation of the type of binder used per production day is to be stated on the weigh slips.

The Contractor shall furnish manufacturers' certified test reports for each carload or equivalent of binder shipped to the project as well as applicable Materials Certificates for the shipment of each carload or equivalent to the production plant. The reports shall be delivered to the Engineer before production of the WMA/HMA. The furnishing of the vendor's certified test reports and material certificates for the PGAB material can be used as the basis for final acceptance of the bituminous material, or, tested by the Engineer. If the Engineer elects to test the binder material at their costs, then the Contractor shall set aside one (1) 1-qt samples of the asphalt binder material obtained from each truckload, shipment, or equivalent of asphalt binder material shipped to the production facility. Each sample shall be labeled with the PG grade, source and batch number, quantity, project name, plant, date, and the sampling inspector. The Contractor shall maintain documentation in the form of a Materials Certificate of each shipment, with a copy attached to each quart sample.

After receiving the quart samples, obtained by the Contractor, the Engineer may test the samples for verification of the performance grade. Material shall conform to the specification requirements for the applicable performance grade as specified herein. Material not conforming to specification requirements shall be subject to corrective action, production suspension, rejection, removal, or reduced payment as determined by the Engineer.

The blending at the WMA/HMA plants of PG binder from different suppliers is strictly prohibited. Contractors may switch to another approved source of PG binder, upon written notification to the Engineer, and by certifying that the tank to be utilized has been drained to an un-pumpable condition. The tank shall not retain more than 0.5% in volume capacity of previous residue source. Contractors who blend PG binders will be reclassified as a supplier and required to certify the binder in accordance with AASHTO M320 and AASHTO R26. Also if any modifications, blending, or addition of additives occurs, the Contractor shall re-certify the material in accordance with AASHTO M320 and AASHTO R26.

A copy of the Certified Test Reports shall be provided in accordance with the frequency requirements established in the latest version of AASHTO M320, and shall include the following:

1) Flash point
2) Rotational viscosity at 275°F and 329°F
3) Specific gravity at 77°F
4) Original G*/sinδ and phase angle at test temperature
5) RTFO percent mass loss

6) RTFO - G*/sinδ and phase angle at test temperature
7) PAV Residue - G*(sinδ) and phase angle at test temperature
8) Creep stiffness and m-value at test temperature
9) Direct tension results (when equipment available)
10) Strain sweep in accordance with AASHTO T315 (optional)
11) Physical hardening after 24 hours in accordance with AASHTO T313 (optional)

3.2.2 Latex Modifier - The latex compound used in conjunction with the asphalt binder for Ultra-thin surface shall be a cold polymerized unvulcanized virgin synthetic rubber in latex form and conform to the following requirements:

LATEX COMPOUND

Type of Latex	Anionic
Total Rubber Solids, % by weight	60 – 72
Ash, % of total rubber solids by weight	3.5 max.
pH	9 - 11
Viscosity, Brookfield #2 @ 20 rpm, 77F	2,000 max.
Styrene Butadiene Ratio	24:76 ± 2
Residual Styrene, % by weight	0.1 max.

The manufacturer of the latex compound shall furnish certification showing actual test results conforming to the specifications. The Contractor shall submit typical samples of the latex compound and the unmodified bitumen to be used for the project to the Engineer prior to production.

3.2.3 Warm Mix Additives (WMA) - Warm Mix Additives shall be added to the Job-Mix Formula unless otherwise directed by the Engineer. No other changes shall be made in the Job-Mix Formula when adding WMA additives unless required by the Engineer.

Only Warm Mix Additives listed on the NEAUPG Qualified WMA Technologies list will be accepted, and shall be limited to chemical additives which are capable of reducing mixture compaction temperatures by a minimum of 50° F. Additives possessing anti-stripping properties are preferred.

3.2.4 Asphalt Binder Anti-Stripping Additive - MHD approved anti-strip additive shall be used.

3.2.5 Tack Coat: Emulsified asphalt; AASHTO M140/ASTM D 997 or AASHTO M 208/ASTM D 2397, RS-1 or CRS-1

3.3 PRELIMINARY MATERIAL ACCEPTANCE: Prior to delivery of WMA/HMA materials to the job site, the Contractor shall submit either an approved, current MHD job mix formulas for the mixtures to be used, or, certified test reports to the Engineer for the following materials certified under the Contractor's quality control system:

3.3.1 Coarse Aggregate

A. Percent of wear
B. Soundness
C. Flat and Elongated
D. Coarse aggregate angularity

3.3.2 Fine Aggregate

A. Liquid limit
B. Plastic index
C. Sand equivalent
D. Fine aggregate anularity

3.3.3 Mineral Filler

3.3.4 Performance Graded Asphalt Binder: The certification(s) shall show the appropriate AASHTO and/or ASTM test(s) for each material, the test results, and a signed statement that the material meets the specification requirement.

3.3.5 The Engineer may request samples for testing, including but not limited to, modifiers, truck coatings, and emulsion, prior to and during production, to verify the quality of the materials and to ensure conformance with the applicable specifications.

4.0 COMPOSITION OF WMA/HMA MIXTURES

4.1 Asphalt – WMA/HMA plant mix may be composed of a homogeneous mixture of aggregate, filler if required, bitumen, and/or additives, combined to meet the composition limits by weight and other characteristics as specified. The several aggregate fractions shall be sized, uniformly graded and combined in such proportions that the resulting mixture meets the grading requirements of these specifications.

4.2 Asphalt Mix Design: The Contractor shall be responsible for the development of all job mix formulas. All job mix formulas other than for Surface Treatment and Base mix shall be based on and supported by volumetric mix designs, either Marshall Method or Superpave method. Marshall Mix design method, procedures and criteria shall be based on Asphalt Institute MS-2 and AASHTO T245 and the requirements contained herein. Superpave mix designs shall be based on Asphalt Institute SP-2 and AASHTO M323, R35, R30, T312, and the requirements contained herein. For the Superpave volumetric mix design, the mixture of asphalt and aggregate shall be oven aged at the mixture's specified compaction temperature in accordance with AASHTO R30.

4.3 JOB MIX FORMULA (JMF). Work shall not begin nor shall any mixture be accepted until the Contractor has submitted a job mix formula, samples of the existing and new materials intended for use, and has established a separate, job mix formula (JMF) for each mixture. A separate job mix formula shall be submitted for each mixture and each approved RAP stockpile (the stockpile shall be of a uniform quality throughout).

4.3.1 JMF Submittal - The job mix formula shall establish the percentage of each additional aggregate required, a single percentage of aggregate passing each required sieve size, a single percentage and the grade of asphalt binder to be added, the percentage of recycling additive, and a single temperature at which the mixture is to be discharged from the plant, and the number of seconds for dry mixing time and the number of seconds for wet mixing time. AASHO-T195 (Ross Count) with a coating factor of ninety-eight (98) percent will be used when necessary to evaluate proper mixing time. The moisture content of all Asphalt upon discharge from the mixer shall not exceed 0.5 percent when tested in accordance with AASHTO T110. The job mix formula shall also specify a single source or uniform blend of particular sources for fine aggregate, a single source for each nominal size of coarse aggregate, and a single source of supply for mineral filler and for asphalt. The JMF shall be submitted in writing by the Contractor to the Engineer at least 30 days prior to the start of paving operations and shall include as a minimum:

A. Percent passing each sieve size.
B. Percent of asphalt binder.
C. Performance grading test results and Material Certificate certifying the PG grade.
D. Number of gyrations for the estimated design ESAL loading.
E. Mixing temperature.
F. Compaction temperature.
G. Temperature of mix when discharged from the mixer.
H. Plot of the combined gradation on the Federal Highway Administration (FHWA) 0.45 power gradation curve.
I. Percent natural sand.
J. Percent fractured faces.
K. Percent flat or elongated particles.
L. Tensile Strength Ratio (TSR).
M. Antistrip agent – type and quantity.
N. Sand equivalent value.
O. Fine aggregate angularity value.
P. Percentage of wear.
Q. Sulfate soundness loss.
R. Individual and combined aggregate specific gravity.
S. Dust to effective asphalt ratio.
T. Graphical plot of air voids, voids in mineral aggregate (VMA), and voids filled with asphalt (VFA) versus asphalt content. The Superpave mixes shall also show density at $N_{initial}$, density at N_{design}, and density at $N_{maximum}$ versus asphalt content

The Contractor shall submit samples to the Engineer, upon request, for JMF verification testing.

The JMF for each mixture shall be in effect until modified in writing by the Engineer. Should a change in sources of materials be made, a new JMF must be approved by the Engineer before the new material is used.

4.3.2 JMF Tolerances - The job mix formula, operating within the allowable action limits for individual measurements as specified in Table 7 herein, shall be set within the design master limits specified for each mixture class, either Table 5 for Superpave design or Table 6 for Marshall design except that the Engineer may modify the design limits if they determine this to be necessary and in the best interest of the Town of Dedham.

4.3.3 Plant Trial Mixtures - After receiving the job mix formula prepared by the Contractor, the Engineer will notify the Contractor regarding a verification of the optimum asphalt content and/or pre-production trials and Control Section for those mixtures so designated by the Engineer. A minimum of one trial mix shall be produced at the Contractor's proposed asphalt binder content and aggregate gradation.

4.3.4 JMF Approval – The Contractor will be notified by the Engineer if the JMF submittals are approved for production. The approved job mix formula for the mixture shall be in effect until modified in writing. As indicated in Section 4.3.3, Plant Trial Mixtures, of this specification, the Engineer will notify the Contractor regarding the placement of a Control Section (See Section 5.0). Following placement and testing of the Control Section, the JMF may have to be modified to meet both production and placement requirements of this specification. If warranted, the JMF resubmittal shall follow the applicable requirements of Section 4.3 of this specification. A JMF, once approved, will not be required for further mix approval for the construction season unless a change has occurred that warrants a new JMF approval or as directed by the Engineer. The approval of all JMFs will terminate on December 31st each year, regardless if the work is carried over to the following year. Control strips are required by the contractor for in-place mat thickness, uniformity, longitudinal joint characteristics, and density requirements before approval.

4.4 WMA/HMA Mixture Design Criteria

TABLE 3. PERCENT VOIDS IN MINERAL AGGREGATE (VMA)	
Nominal Maximum Aggregate Size	Percent Minimum
#4 (4.75mm)	16.0
3/8" (9.5 mm)	15.0
1/2" (12.5 mm)	14.0
3/4" (19.0 mm)	13.0
1.0" (25.0 mm)	12.0

TABLE 4: Asphalt and Volumetric Properties for Superpave Mixtures.

Traffic Levels	Design ESALs (million)	Number of Gyrations by Superpave Gyratory Compactor			Percent Density of Gmm from WMA/HMA specimen			Voids Filled with Asphalt (VFA) Based on Nominal mix size					
		Nini	Ndes	Nmax	Nini	Ndes	Nmax	4.75 mm	9.5 mm	12.5 mm	19.0 mm	25.0 mm	37.5 mm
1	< 0.3	6	50	75	≤ 91.5	95 - 97	≤ 98.0	70 – 80	70 - 80	70 - 80	70 - 80	67 – 80	64 – 80
2	0.3 to < 3.0	7	75	115	≤ 90.5	95 - 97	≤ 98.0	65 – 78	65 - 78	65 - 78	65 - 78	65 - 78	64 - 78
3	3.0 to < 30	8	100	160	≤ 89.0	95 - 97	≤ 98.0	75 – 78	73 - 76	65 - 75	65 - 75	65 - 75	64 - 75
4	≥ 30.0	9	125	205	≤ 89.0	95 - 97	≤ 98.0	75 - 78	73 - 76	65 - 75	65 - 75	65 - 75	64 - 75

TABLE 5. SUPERPAVE ASPHALT MIXTURES												
	Percent by Weight Passing Sieves											
Sieve **Size in. (mm)**	**4.75mm**		**9.5mm**		**12.5mm**		**19.0mm**		**25.0mm**		**37.5mm**	
	Control Points		**Control Points**		**Control Points**		**Control Points**		**Control Points**		**Control Points**	
	Min %	**Max %**	**Min %**	**Max %**	**Min %**	**Max %**	**Min %**	**Max %**	**Min %**	**Max %**	**Min %**	**Max %**
2" (50.0)									-	-	100.0	
1-1/2" (37.5)	-	-	-	-	-	-	-	-	100	-	90.0	100.0
1" (25.4)	-	-	-	-	-	-	100.0	-	90.0	100.0	-	90.0
3/4" (19.0)	-	-	-	-	100.0	-	90.0	100.0	-	90.0	-	-
1/2" (12.5)	100.0	-	100.0	-	90.0	100.0	-	90.0	-	-	-	-
3/8" (9.5)	95.0	100.0	90.0	100.0	-	90.0	-	-	-	-	-	-
#4 (4.75)	90.0	100.0	-	90.0	-	-	-	-	-	-	-	-
#8 (2.36)	-	-	32.0	67.0	28.0	58.0	23.0	49.0	19.0	45.0	15.0	41.0
#16 (1.18)	30.0	60.0	-	-	-	-	-	-	-	-	-	-
#30 (0.600)	-	-	-	-	-	-	-	-	-	-	-	-
#50 (0.300)	-	-	-	-	-	-	-	-	-	-	-	-
#100 (0.150)	-	-	-	-	-	-	-	-	-	-	-	-
#200 (0.075)	6.0	12.0	2.0	10.0	2.0	10.0	2.0	8.0	1.0	7.0	0	6.0
Dust to Binder Ratio(Note):	0.9	2.0	0.6	1.2	0.6	1.2	0.6	1.2	0.6	1.2	0.6	1.2

Note: The Engineer may increase the Dust to binder ratio from 0.6-1.2 to 0.8-1.6 if the proposed aggregate gradation passes beneath the Primary Control Sieve (PCS) control point established in AASHTO M323.

Table 6. MARSHALL DESIGN MASTER RANGE TOLERANCES

Standard Sieves	Base Course	Dense Binder Course	Modified Arterial Top	Top Course	Dense Mix	Surface Treatment	Ultra-Thin Surface (c)
2" (50mm)	100						
1-1/2"(38mm)							
1" (25mm)	57-87	100					
3/4" (19mm)		80 - 100	100				
1/2" (12.5mm)	40-65	65 - 80	90-100	100	100		100
3/8" (9.5mm)			70-90	80-100	80-100	100	90 - 100
#4 (4.75mm)	20-45	48 - 65	45-70	50-76	55-80	80-100	55 - 85
#8 (2.36mm)	15-33	37 - 51	28-55	37-54	48-63	64-85	32 - 47
#16 (1.18mm)			18-40	26-40	36-49	46-68	18 - 31
#30 (0.60mm)	8-17	17 - 30	10-30	17-31	24-38	26-50	11 - 22
#50 (0.30mm)	4-12	10-22	6-23	10-23	14-27	13-31	7 - 18
#100 (0.15mm)			4-15	6-16	6-18	7-17	4 - 12
#200 (.075mm)	0-4	0-6	2-7	2-7	4-8	3-8	3 - 10
Asphalt Content	4.0-5.0	5.0-6.0	5.0-7.0	5.5-7.0	7.0-8.0 (a)	7.0-8.0	6.5-8.0(b)
Temp. Mix (F)	255-295	265-325	265-325	265-325	265-325	275-325	330 - 360
Temp.Mix (C)	124-146	129-163	129-163	129-163	129-163	135-163	166-182
Marshall Blows	N/A	50	75	50	50	N/A	50
Stability, lbs. min		1000	1500	1000	1000		1800
Stability, Newtons		4500	6750	4500	4500		8000
Flow,0.01"(.25mm)		8-16	8-16	8-16	8-16		8-16
AirVoids,%		3.0 - 6.0	3.0 - 5.0	3.0 - 6.0	3.0 - 6.0		3.0 - 5.0

Table 6 Notes:

(a) Dense mix including approved anti-stripping compound shall be furnished and used for protective (bottom) courses of pavement on bridges, and elsewhere shown on the plans.

(b) The total asphalt content in this mixture shall contain 5% ± 0.5% of rubber solids.

(c) The aggregates used for the production of the Ultra-Thin Surface will contain all crushed aggregates, natural sand is not allowed.

The asphalt content of all mixtures shall be calculated on the percentage basis by weight of the total mix.

4.5 Additional WMA/HMA Criteria – In addition to the above WMA/HMA design requirements, the WMA/HMA mixtures shall also conform to the following:

A. Stripping: Each mixture shall be evaluated for stripping by performing indirect tensile tests on compacted mixtures. If the Tensile Strength Ratio (TSR) of the composite mixture, as determined by AASHTO T283 with freeze/thaw, is less than 80, the aggregates shall be rejected or the asphalt treated with an approved anti-stripping agent. The amount of anti-stripping agent added to the asphalt shall be sufficient to produce a TSR of not less than 80. If an antistrip agent is required, it will be provided by the Contractor at no additional cost.

B. Aggregate Composition: The mineral aggregate shall be of such size that the percentage composition by weight, as determined by laboratory sieves, will conform to the gradation or gradations specified in either Table 5 or Table 6, whichever is applicable, when tested in accordance with AASHTO Standards T27 and T11. The gradations in either Table 5 or 6, whichever is applicable, represent the limits which shall determine the suitability of aggregate for use from the sources of supply. The aggregate, as selected (and used in the JMF) and blended, shall have a gradation within the limits designated in either Table 5 or 6, whichever is applicable, and shall not vary from the low limit on one sieve to the high limit on the adjacent sieve, or vice versa, but shall be well graded from coarse to fine.

C. JMF Deviations: Deviations from the final approved mix design for asphalt binder content and gradation of aggregates shall be within the action limits for individual measurements as specified in Table 7. The limits still will apply if they fall outside the master grading band in Table 5 or 6, whichever is applicable.

D. Minimum Lift Thickness Consideration: The maximum size aggregate used shall not be more than one-half of the compacted thickness of the course being

constructed on a prepared surface or that which can be placed to achieve specification requirements. The maximum size is defined as one sieve size larger than the nominal maximum size. The nominal maximum size is defined as one sieve size larger that the first sieve to cumulatively retain more than 10 percent.

E. WMA/HMA may be stored in surge or storage bins provided that the mixture used from the bins is of a uniform quality and meets the following requirements:

Temporary Storage of Bituminous Mixture - Use of surge bins or storage bias for temporary storage of Asphalt will be permitted as follows:

1. The Asphalt mixture may be stored in surge bins for a period of time not to exceed three hours.

2. The Asphalt mixture may be stored in insulated and heated storage bins for a period of time not to exceed twelve hours, provided an inert gas atmosphere is maintained in the bin during the storage period.

3. If the Engineer determines that there is an excessive amount of heat loss, segregation and/or oxidation of the mixture due to temporary storage, use of surge bins or storage bins will be discontinued.

In addition, the recovered asphalt from the mix samples obtained 30 days after production shall meet the following requirements:

RECOVERED ASPHALT
ASTM D1856
ABSON METHOD

Test Property	Min.	Max.
Viscosity, poises @ 140F.		6000
Penetration, dmm @ 77F.	45	100
Ductility, cm @ 77F.	75	
T_{max} for G*/Sin (d) DSR (RTFO Aged)	-	One Grade Higher

5.0 WMA/HMA CONTROL SECTION. Prior to full production for the Town, the Contractor shall place a quantity of Asphalt according to the JMF and the project specifications. The amount of mixture should be sufficient, at a minimum, to construct a test section 300 feet long

and 20 to 30 feet wide placed in two lanes, with a longitudinal joint, and shall be of the same depth specified for the construction of the course which it represents. The underlying grade or pavement structure upon which the Control Section is to be constructed shall be the same as the remainder of that project course represented by the Control Section. The equipment used in construction of the Control section shall be the same type and weight to be used on the remainder of the course represented by the Control Section. The control strip may be as large as one production day on a Town street as long as a longitudinal joint has been constructed.

Two Random sample(s) shall be taken at the plant by the Engineer and tested for air voids in accordance with the Section 8.10, Plant-Produced Material. One random sample of mixture shall be taken at the plant and tested for aggregate gradation and asphalt binder content in accordance with the Section 8.10 Plant-Produced Material.

Three randomly selected cores shall be taken from the finished pavement mat in the Control Section, and three from the longitudinal joint, and tested in accordance with Section 8.2, Field Placed WMA/HMA Material. Random sampling shall be in accordance with procedures contained in ASTM D3665.

Mat density and air voids shall be evaluated in accordance with Section 8.2, Field Placed WMA/HMA Material.

The performance control strip shall be considered acceptable if the uniformity, thickness, longitudinal joint density and mat density, and plant air voids are within the requirements of this specification.

If the initial Control section should prove to be unacceptable, the necessary adjustments to the JMF, plant operation, placing procedures, and/or rolling procedures shall be made. A second Control section shall then be placed. If the second test section also does not meet specification requirements, both sections shall be removed at the Contractor's expense. Additional Control sections, as required, shall be constructed and evaluated for conformance to the specifications. Any additional sections that are not acceptable shall be removed at the Contractor's expense. Full production shall not begin until an acceptable section has been constructed and accepted by the Engineer. The initial Control section, whether acceptable or unacceptable, and any subsequent section that meets specification requirements shall be paid for in accordance with the Section 10.0 PAYMENT.

Job mix formula quality control testing is to be performed by the Contractor at the start of plant production and in conjunction with the calibration of the plant for the JMF. It should be recognized that the aggregates produced by the plant might not satisfy the gradation requirements or produce a mix that exactly meets the JMF. In those instances, it will be necessary to re-evaluate and re-design the mix using plant-produced aggregates. Specimens should be prepared and the optimum asphalt binder content determined in the same manner as for the original design tests. A revised JMF will need to be submitted and a test section constructed prior to approval and full production. The test section and JMF submittal shall conform to all the specification requirements contained herein.

6.0 EQUIPMENT

6.1 Asphalt Mixing Plant - Shall meet MHD M3.11.07.

A. Sampling Platform: A safe and adequate platform or catwalk with stairway and railing shall be provided to accommodate the inspector while checking temperatures and obtaining samples of the mixture from haul vehicles. The height of the platforms and raised platforms shall be adequate to accommodate safe acquisition of mix samples from the type of hauling unit(s) being utilized on the project.

B. Testing Laboratory - The Contractor or producer shall provide a testing laboratory at the production plant for quality control and quality acceptance functions during periods of mix production, sampling, and testing, and whenever materials subject to the provisions of these specifications are being supplied or tested. The laboratory shall contain adequate equipment, space, and utilities as required for the performance of the specified tests.

It shall be available for joint use by the Contractor for quality control testing, if applicable, and by the Engineer for acceptance testing. And must have adequate equipment for the performance of the tests required by these specifications and the requirements of NETTCP. The Engineer shall have priority in use of the equipment necessary for acceptance testing. All the necessary testing equipment shall be located at the WMA/HMA plant supplying material to the project. In addition, all ancillary and miscellaneous equipment needed to perform the testing in accordance with these specifications shall be provided by the Contractor at no additional cost.

The effective working area of the laboratory shall be a minimum of 150 square feet with a ceiling height of not less than 7.5 feet. Lighting shall be adequate to illuminate all working areas. It shall be equipped with heating and air conditioning units to maintain a temperature of 70°F $\pm$ 5°F.

The plant laboratory shall further contain and be kept supplied with the following laboratory equipment:

Balance: 20,000gm capacity minimum, sensitivity 0.1gm.

Marshall Equipment: Automatic Asphalt compactor mounted in accordance with ASTM D1559 and conforming to specifications for AASHTO T-245 which consists of totally enclosed, rigidly mounted operated frame, a standard circular-foot compaction hammer assembly designed to ensure an eighteen (18) inch drop regardless of specimen height, a one third (1/3) horsepower motor with belt guard and controls, an automatic counter that shuts off the power after the set number of hammer drops, and a standard compaction pedestal with guide pins for centering one standard (4 inch diameter) bituminous mold at a time. The Contractor shall also provide two (2) stability compaction molds conforming to ASTM D1559 and suitable for use with the automatic bituminous compactor.

NOTE: The Soil test Model AP-800 automatic bituminous compactor and AP-166 stability compaction molds have been found suitable.

Superpave Gyratory Compactor (For plants supplying materials contained in Table 5) conforming to the requirements of AASHTO R30, R35, M323, T312 and the Asphalt Institute Manual SP-2.

Bulk specific gravity determination equipment (AASHTO T166), and theoretical maximum specific gravity equipment (AASHTO T209).

Laboratory facilities shall be kept clean and all equipment shall be maintained in proper working condition. The Engineer shall be permitted unrestricted access to inspect the Contractor's laboratory facility and witness quality control activities, if applicable. The Engineer will advise the Contractor in writing of any noted deficiencies concerning the laboratory facility, equipment, supplies, or testing personnel and procedures. When the deficiencies are serious enough to be adversely affecting test results, the incorporation of the materials into the work shall be suspended immediately and will not be permitted to resume until the deficiencies are satisfactorily corrected.

6.2 Hauling Equipment - Shall meet MHD 460.61.

6.3 Pavers - Shall meet MHD 460.63

The paver screed may be equipped with a Longitudinal Notched - Wedge Joint paver attachment or Straight Wedge Joint paver attachment and screed mounted roller attachment. When placing WMA/HMA pavement courses at a thickness of 1.5" or greater, the notched wedge is recommended; when placing WMA/HMA pavement courses less than 1.5", the straight wedge is recommended. The notched wedge joint includes a variable notched vertical edge (the notch vertical height to be equal to the mixture's maximum aggregate size). The sloped surface of the diagonal wedge joint shall not exceed a 6:1 slope.

6.4 Rollers - Rollers of the vibratory, steel wheel, oscillatory, and pneumatic-tired type may be used. They shall be in good condition, capable of reversing direction without backlash, and operating at slow speeds to avoid displacement of the Asphalt. Static rollers shall be operated at speeds not to exceed 3 mph and vibratory rollers shall be operated at a minimum of 10 to 12 impacts/ft in vibratory mode. The number, type, and weight of rollers shall be sufficient to compact the mixture to the required density while it is still in a workable condition.

The use of equipment which causes excessive crushing of the aggregate or that which does not produce a smooth, dense and uniform WMA/HMA mat will not be permitted.

The Contractor shall exercise great caution when using vibratory rollers so as not to cause damage to buried infrastructure or adjacent infrastructure. Damage to buried or adjacent infrastructure will be the responsibility of the Contractor. The new Oscillation type rollers are acceptable for use for intermediate compaction and back rolling of WMA/HMA in the Town of Dedham.

The Contractor is encouraged, when applicable, to use a pneumatic square edge-tired compaction roller (either one or both axles) as another acceptable alternate for the Intermediate and Final rolling of hot mix in the Town of Dedham.

7.0 WMA/HMA CONSTRUCTION

7.1 Weather Limitations - The Asphalt shall not be placed when weather conditions of fog or rain prevail or when the pavement surface or base shows signs of free moisture (film of water). When the surface temperature of the underlying course is less than 50°F, the estimated time available for compaction shall be provided by the Contractor to the Engineer. The Engineer and the Contractor shall determine if there is an adequate amount of time available to compact the mixture. The Contractor assumes responsibility for constructing the pavement to meet compaction and specification requirements.

The Engineer will not permit work to continue when overtaken by sudden storms until the pavement surface shows no signs of free moisture. The material in transit at the time of shutdown will not be placed until the pavement surface shows no signs of free moisture, provided the mixture is within temperature limits as specified.

The construction of Asphalt concrete pavements shall terminate on November 15 and shall not be resumed prior to April 1 except as determined and directed in writing by the Engineer.

7.2 Thermometer: The Contractor will supply an approved dial type thermometer with a temperature range of 50ºF to 500ºF and an infrared pistol thermometer for use during WMA/HMA placement. The infrared pistol thermometer shall be Fahrenheit or Celsius selectable and conform to the following requirements:

Portable and battery operated	Accuracy of +/- 2%
Repeatability of +/- 3ºC	Emissivity preset at 0.95
LCD Display to nearest 1º	Temp. Operating range of -4ºF to 752ºF

The thermometers will remain the property of the Contractor upon completion of the project.

7.3 Pre-Paving Conference: Prior to the placing of any WMA/HMA, a pre-paving conference (approximately 5 hours in length) shall be held to discuss and approve the paving schedule, source of WMA/HMA, job mix formula approvals, type and amount of

equipment to be used, sequence of paving pattern, rate of WMA/HMA supply, all sampling, testing and reporting procedures to be used, traffic control, safety, and general continuity of the operation. Engineer's representatives, Contractor's plant, quality control and field representatives and Engineer's testing and inspection agents shall attend this meeting. All equipment used shall be approved on the project site prior to starting up each day. **It will be mandatory for the Contractor and the paving subcontractor, if utilized, to attend this conference.** The Contractor will be responsible for all costs associated with additional training.

The Engineer, upon 48 hours notice, may be able to hold this conference preferably on the forecast of an inclement day.

7.4 Preparation of the Underlying Surface. Immediately before placing the Asphalt, the underlying course shall be thoroughly cleaned of all dust and debris by a self-propelled sweeper. Areas inaccessible by power sweepers shall be broom swept until the pavement surface is clean. Extra care shall be required during fall leaf fall.

Proof roll prepared base material surface, if applicable, to identify areas requiring removal and recompaction, and to provide a uniform degree of compaction over the entire pavement area.

Do not begin paving work until deficient base material areas and utility trenches have been corrected and are ready to receive paving. Paving shall not be applied until the Engineer inspects and approves the finished base.

When an existing surface or new base upon which the lower course is to be placed contains unsatisfactory irregularities, in the Engineer's judgment, such irregularities may be eliminated by an adequate placing and compaction of WMA/HMA mixture so as to furnish a surface with true contour and grade before placing any specified course of mixture.

Check all frames, covers, grates, water valve boxes and other miscellaneous castings that are located in the proposed pavement areas to ensure that all have been correctly positioned and set to the proper slope and elevation. All covers and grates shall be set flush with the required finished surface. No depressions or mounds will be permitted in the pavement to accommodate inaccuracies in the setting of castings.

For Reclaimed base, reconstruction or where new base is graded, the Contractor shall furnish, set, and maintain all line and grade stakes necessary to guide the automated grade control equipment. Where required these control stakes shall be maintained by the Contractor and used throughout the operations, from the grading of the subbase material up to and including the final layers of the pavement.

Adequate artificial lighting shall be provided during night placements. Hauling over freshly placed material shall not be permitted until the material has been compacted, as specified, and allowed to cool to an internal temperature of 140°F minimum.

Proper precautions shall be taken to prevent damage by construction operations to edges adjacent to the Asphalt. These edges may be, but are not limited to, gutters, catch basins, curbs, concrete structures, and Asphalt concrete. If damage occurs, repairs shall be made to the satisfaction of the Engineer with no additional payment.

7.5 Tack Coat: Contact surfaces of manholes, structures, vertical pavement edges, etc. shall be painted with a thin, uniform tack coat just before the material is placed against them.

Tack coat is required on all surfaces to be paved; this includes leveling, base or intermediate layers of WMA/HMA, unless the underlying WMA/HMA layer was placed during the same day. Particular attention should be made during the application that the longitudinal joint areas be treated with no bare spots. Missing areas adjacent to the longitudinal joint area will require either re-application or localized hand work application as directed by the Engineer.

Tack coat shall be applied at a residual binder amount on the pavement between 0.03 to 0.05 gallons per square yard. Use the lower application amount between new lifts and the higher application rate on milled or Portland cement surfaces. This amounts to a very thin application that needs to be carefully applied. Massachusetts uses RS-1 and CRS-1 type asphalt emulsions for tack coating. These can be applied, as an emulsion, between 0.05 to 0.08 gallons per square yard. Tack coat shall be supplied as part of the WMA/HMA operation.

Allow tack coat to dry from a brown color to a black color prior to paving.

7.6 WMA/HMA Production

The aggregates and the asphalt binder material shall be weighed or metered and introduced into the mixer in the amount specified by the JMF and within the allowable action limits as stated in Table 7 WMA/HMA PRODUCTION LIMITS. These limits shall be applied to the target values established in the JMF. Corrective action shall be taken by the Contractor when the calculated individual result for gradation or asphalt content falls outside the target JMF value beyond the action limit listed in Table 7. The Contractor shall take the appropriate action when results indicate the material is out of tolerance. The Contractor shall be required to suspend production when the calculated individual result for gradation falls outside the target JMF value beyond the suspension limit listed in Table 7, or when the asphalt binder content is below the minimum values stated in Table 5 or 6, whichever is applicable. The Contractor shall be required to suspend production if two points in a row fall outside the Action Limits for individual measurements or if three nonconsecutive samples fall outside the Action limits. The

Contractor shall be required to suspend production if one point falls outside the Suspension Limits for individual measurements. The Contractor shall also be required to suspend production if one point falls outside the Suspension Limits for range, Table 8.

7.6.1 Plant Trials - If production is suspended, the production facility shall be required to produce material on a trial basis for testing purposes without shipment to the project. No payment will be made for material and labor employed for nonconforming plant trials. The Engineer or his representative shall pay for acceptance sampling and testing for the first set of trials necessary to determine conformance with the specification requirements. If the first set of trials does not conform to specification requirements, the Contractor shall pay for any additional trial sampling and testing for acceptance. When trials have been approved, the plant will return to its normal operation.

Failure to stop production and make adjustments when required due to an individual test(s) not meeting the specified requirements may subject all of the mix from the stop point to be considered unacceptable.

RAP VERIFICATION - The Town will randomly test WMA/HMA mixtures from the production plant or storage silos to determine the quality of the PG binder. For non-modified binder mixtures, the absolute viscosity of the recovered asphalt shall be no greater than 6,000 poises at 140ºF. If the absolute viscosity is greater than 6,000 poises, then a full PG binder test verification will be run for conformance to the PG grade specified. For modified asphalt binder mixtures, a full PG binder test verification will be run for conformance to the PG grade specified. Failure of the PGAB to conform to specification requirements may be cause for rejection of the Lot. Further PGAB tests may be conducted on previous Lots; all costs for the PGAB tests will be the responsibility of the Producer if the results do not meet specifications [T_{MAX} for G*/Sin (d) DSR (RTFO Aged] for PG 64-28 or 64-22 (whichever is applicable) recently placed.

<u>7.7 Transporting, Placing and Finishing:</u> WMA/HMA deliveries shall be scheduled so that placing and compacting of mixture is uniform with minimum stopping and starting of the paver.

Upon arrival, the mixture shall be placed to the full width by a Asphalt paver. It shall be struck off in a uniform layer of such depth that, when the work is completed, it shall have the required thickness and conform to the grade and contour indicated. The speed of the paver shall be regulated to eliminate pulling and tearing of the Asphalt mat. Unless otherwise permitted, placement of the mixture shall begin along the centerline of a crowned section or on the high side of areas with a one-way slope. The mixture shall be placed in consecutive adjacent strips having a minimum width of 10 feet except where edge lanes require less width to complete the area. The longitudinal joint in one course shall offset the longitudinal joint in the course immediately below by at least one (1) foot, however, the joint in the top layer shall be at the centerline of the pavement. Transverse joints in one layer shall be offset by at least two feet from transverse joints in the previous layer. The placement of the material along the longitudinal joint may be performed by

setting the screed to overlap the first mat. The elevation of the screed above the surface of the first mat should be equal to the amount of roll-down expected during compaction of the new mat. The overlapped material shall be bumped by the lutes, if necessary, to optimize the density along the longitudinal joint. Under no circumstances should the overlapped material be broadcast across the mat. Excess material should be removed by hand. Transverse joints in adjacent lanes shall be offset a minimum of 10 feet.

On areas where irregularities or unavoidable obstacles make the use of mechanical spreading and finishing equipment impractical, the mixture may be spread and luted by hand tools. When hand spreading is permitted, the mixture shall be distributed into place by means of hot shovels and spread with lutes in a loose layer of uniform density and correct depth. The use of rakes to spread the Asphalt shall not be permitted. Loads shall not be dumped any faster than they can be properly handled by the shovelers and the shovelers shall not distribute the dumped load any faster than it can properly be handled by the luters. The luting shall be carefully and skillfully done to avoid segregation and so that, after the first passage of the roller over the luted mixture, no back patching will be necessary. Compaction must immediately follow hand spreading such that specification density is achieved while the mixture temperature is above the manufacturers recommended compaction temperature for the performance graded binder.

The mixtures shall be placed and compacted only at such times as to permit the proper inspection and checking by the Engineer.

The mixtures shall only be placed in the work when they can be efficiently and satisfactorily placed, compacted, smoothed, and made uniform in accordance with these specifications. Unless otherwise permitted by the Engineer for special particular conditions, only machine methods of placing shall be used.

No mixture shall be placed unless the breakdown and intermediate rolling can be completed by the time the material has cooled to 150ºF, or that minimum compaction temperature specified by the binder manufacturer and provided that the density and uniformity of the completed pavement attains specification compliance.

No traffic of any kind shall be permitted on the WMA/HMA intermediate or WMA/HMA base when dirt or any other foreign substance may be tracked thereon.

Immediately after any course is screeded and before roller compaction is started, the surface shall be checked, any irregularities adjusted, any accumulation from the screed removed by rake or lute, and all fat spots in any course removed and replaced with satisfactory materials. Irregularities in alignment and grade along outside edges shall be corrected by the addition or removal of mixture before the edges are rolled. Indiscriminate casting of mix on the new screeded surface, where irregularities are not evident, shall not be permitted.

All hot mix shall be placed and compacted in such a manner as to ensure a continuous

bond between the tacked hot mix pavement surfaces and obtain the required density.

7.7.1 Second Control Strip Requirement - If it is determined, during the performance of the contract, that the pavement does not conform to the surface tolerance, density and uniformity requirements, the Engineer may order the Contractor to cease all operations and construct an WMA/HMA CONTROL SECTION consisting of a sufficient quantity of surface course mixture. The Contractor shall construct a control section as directed by the Engineer either: a minimum of 100 feet long by 12 feet wide, or a minimum of 50 feet long by a minimum of 24 feet wide depending upon the problem. A control section may be required each time a change is made in the Job Mix Formula, sources of supply or paving and rolling equipment.

The mixture shall be prepared, placed, and compacted in accordance with this specification. When the control section pavement has cooled sufficiently, a total of six (6) samples of the finished pavement shall be taken and tested in accordance with the requirements of Section 5.0.

If the tests by the Engineer indicate that pavement does not conform to specification requirements, necessary adjustment to plant operation and placement/rolling procedures shall be made.

Where the average density of the core samples does not conform to specification requirements, the pavement shall be removed at no cost to the Engineer. No payment will be made for material and labor employed, either in placement or removal of the nonconforming control section.

The second control strip may be removed at the direction and at no cost to the Engineer if the test result of any one mat core density falls below 90% of theoretical maximum laboratory density and/or any one longitudinal joint density falls below 88% of theoretical maximum laboratory density.

The Contractor shall not be permitted to place surface course pavement until a control section is approved by the Engineer.

7.8 Joints: The formation of all joints shall be made in such a manner as to ensure a continuous bond between the courses and obtain the required density. All joints shall have the same texture as other sections of the course and meet the requirements for smoothness and grade. When abutting a previously placed lane, the longitudinal joint should be rolled first followed by the regular rolling procedure.

7.8.1 Transverse Joints - The roller shall not pass over the unprotected end of the freshly laid mixture except when necessary to form a transverse joint. When necessary to form a transverse joint, it shall be made by means of placing a bulkhead or by temporarily tapering the course, in which case the edge shall be cut

back to its full depth and width on a straight line to expose a vertical face. In both methods, all contact surfaces shall be given a coat of hot-pour rubberized asphalt sealer before placing any fresh mixture against the joint.

7.8.2 Longitudinal Joints - All longitudinal joints shall be constructed with the first paver pass in a neat straight line. Deviation from trueness will negate the ability to form a properly compacted longitudinal joint.

The paver screed may be equipped with a Longitudinal Notched - Wedge Joint or Straight Wedge Joint paver attachment and screed mounted roller attachment when placing WMA/HMA pavement courses. Use the Notched Wedge Joint for thicknesses of 1.5" or greater and use the Straight Wedge Joint for thicknesses less than 1.5". The notched wedge joint shall include a variable notched vertical edge (the notch vertical height to be equal to the mixture's maximum aggregate size). The sloped surface of the diagonal wedge joint shall not exceed a 6:1 slope. Prior to placing the adjacent paver pass for sloped joints, all joint contact surfaces shall be given a tack coat prior to placing any fresh mixture against the joint.

Vertical butt joints which are not constructed straight, or are not constructed with an edge restraining device (either a commercial paver screed attachment or by dropping the end gate down to the surface), or are damaged or otherwise defective shall be cut back 3 inches to expose a clean, sound surface for the full depth of the course. All contact surfaces shall be given a coat of hot-pour rubberized asphalt sealer prior to placing any fresh mixture against the joint.

7.8.3 Longitudinal and transverse joints shall have an in-place density when measured by the average of three, six (6") inch cores between 90% to 98% of maximum theoretical.

7.9 Compaction of WMA/HMA Mixture After Placing - The mixture shall be thoroughly and uniformly compacted by rolling. The surface shall be compacted as soon as possible when the mixture has attained sufficient stability so that the rolling does not cause undue displacement, cracking or shoving. The sequence of rolling operations and the type of rollers used shall be at the discretion of the Contractor. Rolling shall be initiated with the drive roll or wheel towards the paving machine. When rolling on steep grades, the previous procedure may need to be altered.

The speed of the roller shall, at all times, be sufficiently slow and of uniform speed to avoid displacement of the hot mixture and be effective in compaction. Any displacement occurring as a result of reversing the direction of the roller, or from any other cause, shall be corrected at once.

Sufficient rollers shall be furnished to handle the output of the plant. Rolling shall continue until the surface is of uniform texture, true to grade and cross section, and the required field density is obtained. The number of rollers and passes required shall be

governed by the compaction results; however, at least two rollers shall be provided for each paver employed on the paving operation. The Town of Dedham is encouraging the use of pneumatic or oscillation rollers. If one of the selected rollers is pneumatic, it shall be equipped with the European square edge tires. This will allow the pneumatic roller to handle both the intermediate compaction as well as the back rolling responsibilities on two-roller trains. An alternate to a full pneumatic European tired roller would be a combination 10-ton steel vibratory with large pneumatic square edge rear wheels. An acceptable alternative to the vibratory or pneumatic tired rollers would be the "Hamm" Oscillatory roller. Each roller shall be operated by a competent, experienced roller operator and shall be kept in as nearly continuous operation as practicable while work is underway. A plate shall be attached to each roller showing the ballasted and unballasted weight per length-width of tread.

To prevent adhesion of the mixture to the steel roller, the drums or shall be kept properly moistened, cocoa mats kept clean and scrapers used, but excessive water will not be permitted. Pneumatic rollers shall be operated on adjacent pavement surfaces to get the tires warm to hot from friction, then moved to the fresh mat.

In areas not accessible to the roller, the mixture shall be thoroughly compacted with hand tampers and vibratory plate compactors.

Any mixture that becomes loose and broken, mixed with dirt, contains check-cracking, or in any way defective shall be removed and replaced with fresh hot mixture and immediately compacted to conform to the surrounding area. This work shall be done at the Contractor's expense. Skin patching shall not be allowed.

Along any adjoining edge such as curb, gutter or an adjoining pavement, and after the WMA/HMA is placed by the paver, just enough of the hot WMA/HMA shall be placed by hand method to fill any space left open. These joints shall be properly 'set up' with the back of a lute at the proper height and level to receive the maximum compaction. Any areas where the rollers cannot access shall be hand tamped or plate compacted.

> 7.9.1 Shaping Edges - While the surface is being compacted and finished, the Contractor shall carefully trim the outside edges of the pavement to the proper alignment. Edges so formed shall be beveled while still hot with the back of a lute or smoothing iron and thoroughly compacted by tampers or by other satisfactory methods.

7.10 Surface Smoothness - The finished surfaces of the pavement shall be uniform in appearance, free from irregularities in contour and texture and shall present a smooth-riding surface. Smoothness evaluation applies to all Asphalt concrete roadways receiving 1.5" or more in plan (compacted) thickness of WMA/HMA pavement.

Tests for conformity with the specified crown and grade shall be made by the Contractor immediately after initial compaction. Any variation shall be corrected by the removal or addition of materials and by continuous rolling.

The finished surface of the pavement, when measured with a 10-foot straightedge, shall not vary more than 1/4 inch for the surface course and 3/8 inch for the intermediate course measured perpendicular and parallel to the centerline. If, in the opinion of the Engineer, the surface visually appears wavy, but meets the surface tolerance test with the 10-foot straightedge, the Engineer reserves the right to additionally test with the use of Inertial Profile Equipment which records cumulative vertical deviations per unit length using a statistic called International Roughness Index (IRI). Town of Dedham street upset limit for IRI is set at 135 in/mile using similar equipment that MHD specifies in their Quality Assurance WMA/HMA projects.

After the completion of final rolling, the smoothness of the course shall again be tested; humps or depressions exceeding the specified tolerances shall be immediately corrected by removing the defective work and replacing with new material, as directed by the Engineer. This shall be done at the Contractor's expense.

Skin patching will not be permitted.

When profile corrections are required, the Contractor shall use one or more of the following corrective methods:

a. Removing and replacing the entire pavement thickness;
b. Diamond grinding or micro milling;
c. Overlaying (not patching) with the specified surface course;
d. Removing the surface by milling and applying a lift(s) of the specified course(s);
e. Use of other methods that will provide the desired results;

The corrective method(s) chosen by the Contractor shall be performed at the Contractor’s expense, including all necessary equipment and traffic control. Areas of removal and replacement shall be removed the full width of the lane. The removal areas shall begin and end with a transverse butt joint which shall be constructed with a transverse saw cut perpendicular to the centerline. Replacement materials shall be placed in sufficient quantity so the finished surface will conform to grade and smoothness requirements. The corrective area shall conform to all material and density specification requirements. When the corrective work consists of an overlay, the overlay shall cover the full width of the pavement including shoulders. The area overlaid shall begin and end with a transverse butt joint which shall be constructed with a transverse saw cut and asphalt removal. All materials shall meet contract requirements. The overlay shall be placed so the finished surface will conform to grade and smoothness requirements. The overlayed area shall be compacted to the specified density.

The Engineer shall retest any sections where corrections were made to verify that the corrections produced a surface that conforms to the grade and smoothness requirements

7.11 Uniformity- The WMA/HMA mat shall be smooth, dense, and uniform. Uniformity is generally affected by Thermal and/or Aggregate segregation.

If segregation is evident and discernable by either the Contractor or the Engineer, the Contractor shall immediately cease production and take steps to correct and eliminate the cause(s) of the segregation to the satisfaction of the Engineer.

The Contractor shall review all potential causes of segregation as it relates to its operation, including but not limited to WMA/HMA Plant issues, loading and transportation issues, placement issues, thermal segregation, and hand work. The Contractor shall employ additional investigation methods and make the necessary changes in their operation such that segregation is eliminated and mat uniformity is acceptable.

7.12 Thickness - The thickness requirements contained herein shall apply only when each pavement layer is specified to be a uniform compacted thickness of 1 inch or greater. Thickness shall be evaluated for acceptance by the Engineer to the requirements shown on the plans. Measurements of thickness may be checked periodically by the Contractor in following their QC system for field operations. Measurements of thickness for acceptance shall be made by the Engineer using four-inch minimum diameter pavement cores removed also for subsequent density measurement.

The finished surfaces of each WMA/HMA pavement course shall not vary from that specified or cross sections shown on the contract drawings by more than one-quarter (1/4) of an inch. The Contractor shall correct pavement areas varying in excess of this amount by removing and replacing the defective work or as ordered by the Engineer. Skin patching will not be permitted.

7.13 Grade - The finished surface of the pavement shall not vary from the gradeline elevations as shown on the plans by more than 1/2 inch. The Contractor shall remove deficient areas and replace with new material. Sufficient material shall be removed to allow at least 1.5 inches of Asphalt to be placed. Skin patching for correcting low areas shall not be permitted. High points may be ground off.

7.14 Leveling Course - Any WMA/HMA used for truing and leveling shall meet the requirements of the mix design methods and the requirements of the TABLE 7 or TABLE 5 and 6 specifications for the applicable mixtures. Leveling courses shall not be subject to density requirements. The thickness of the Leveling Course shall be measured off the interface with the existing milled or un-milled pavement surface. The leveling course shall be compacted with the same effort used to achieve placement and density of the test section. The truing and leveling course shall not exceed a nominal thickness of 1.5 inches.

7.15 Opening to Traffic

No vehicular traffic or loads shall be permitted on the newly completed pavement until adequate stability has been attained and the material has cooled sufficiently to an internal temperature of 140ºF or less. If the climatic or other conditions warrant, or if the PGAB manufacturer recommends, the period of time before opening to traffic may be extended at the discretion of the Engineer.

7.16 Contractor Quality Control of WMA/HMA Pavement - Contractor Quality Control shall include production and placement Inspection and Testing and shall apply to all tons used in the Town of Dedham road program.

The Contractor shall be prepared to discuss and present, at the pre-paving conference, their understanding of quality control for this contract.

7.16.1 Control Charts

Contractor may develop production control charts and post for visual reference in the testing laboratory. The control charts should identify the project number, the contract item number, the test number, each test parameter, the Action and Suspension Limits applicable to each test parameter, and the production test results. If the project data during production indicates a problem and the Contractor is not taking satisfactory corrective action, then the Engineer may suspend production or acceptance of the material, in accordance with these specifications.

A. Individual Measurements: Control charts for individual measurements may be established to indicate production quality control within given tolerances for aggregate gradation and asphalt binder content. The control charts will use the JMF target values as the indicator of central tendency for the following test parameters with associated Action and Suspension Limits:

TABLE 7 WMA/HMA PRODUCTION LIMITS FOR INDIVIDUAL MEASUREMENTS

Sieve Size	Action	Suspension
1-1/2" (37.5mm)	0%	0%
1" (25.0 mm)	±6%	±9%
3/4" (19.0 mm)	±6%	±9%
1/2" (12.5 mm)	±6%	±9%
3/8" (9.5 mm)	±6%	±9%
#4 (4.75 mm)	±6%	±9%
#8 (2.36 mm)	±5%	±7.5%
#16 (1.18 mm)	n/a	n/a
#30 (0.600 mm)	n/a	n/a
#50 (0.300 mm)	n/a	n/a
#100 (0.150 mm)	n/a	n/a
#200 (0.075 mm)	±2%	±3%
Asphalt Binder Content	±0.4%	±0.70%
Design Air Voids (4.0%)	±1%	±1.7%

When evaluating the production limits, the sieve sizes above the maximum size aggregate should be deleted from the Individual Measurements Chart and the maximum aggregate sieve size Action and Suspension Limits should be changed to 0%.

Range. Control charts for range may be established to indicate production variability for the test parameters and Suspension Limits listed below. The range may be computed as the difference between the high and low test results per lot for each control parameter. The Suspension Limits specified below are based on a sample size of n = 2. Should the Contractor elect to perform more than two tests per lot, the Suspension Limits shall be adjusted by multiplying the Suspension Limit by 1.18 for n = 3 and by 1.27 for n = 4.

Table 8 CONTROL CHART LIMITS BASED ON RANGE	
(Based on n = 2)	
Sieve	Suspension Limit
1-1/2" (37.5 mm)	11 percent
1" (25.0 mm)	11 percent
3/4" (19.0 mm)	11 percent
1/2" (12.5 mm)	11 percent
3/8" (9.5 mm)	11 percent
#4 (4.75 mm)	11 percent

#8 (2.36 mm)	10 percent
#16 (1.18 mm)	n/a
#50 (0.30 mm)	n/a
#200 (0.075 mm)	3.5 percent
Asphalt Binder Content	0.8 percent
Design Air Void Content	2.0 percent

CORRECTIVE ACTION

The Contractor's Quality Control system shall include an appropriate action to be taken when the process is believed to be out of tolerance. The Contractor should review the control charts on a continuous basis making adjustments to the process when necessary to keep the product consistent. As a minimum, a process shall be deemed out of control and production stopped and corrective action taken, if:

Design Air Voids falls outside the Suspension Limit line for its individual measurement or range as indicated in Table 7 or Table 8; or

Design Air Voids and two or more points fall outside the Action Limit line for individual measurements or range as indicated in Table 7 or Table 8 ; or

Design Air Voids fall outside the Action Limit and one point falls outside the Suspension Limit for individual measurements or range as indicated in Table 7 or Table 8; or

Three points in a row fall outside the Action Limit line for individual measurements as indicated in Table 7.

Three nonconsecutive samples fall outside the Action Limit line for individual measurements as indicated in Table 7.

Two consecutive streets or two consecutive 1,000 ton lots of material tested for mat density or longitudinal joint density falls below the threshold density for 100% adjustment, as noted in Table 9 and Table 10.

The average of the last five streets or five 1,000 ton lots of material tested for mat density or longitudinal joint density falls below the threshold density for 100% adjustment, as noted in Table 9 and Table 10.

Acceptance testing requirements are the responsibility of the Engineer.

8.00 Quality Acceptance of WMA/HMA

All acceptance sampling and testing necessary to determine conformance with the requirements specified in this section will be performed by the Engineer at no cost to the Contractor, unless

otherwise stated herein. Testing organizations performing these tests shall meet the requirements of ASTM D 3666. All equipment in Contractor furnished laboratories shall be calibrated and verified by a testing organization prior to the start of operations. Such verification/certification shall be furnished to the Engineer prior to production. Engineer's testing personnel shall be certified by the New England Transportation Technician Certification Program (NETTCP). This function does not relieve the Contractor from performing their daily quality control tasks as part of their normal operating business.

The Engineer or their agent shall have access at any time to all parts of the producing plant for:

A) Inspection of the condition and operations of the yard, plant and laboratory.

B) Confirmation of the adequacy of equipment in use.

C) Verification of the character and proportions of the mixture.

D) Determination of temperatures being maintained in the preparation of the mixtures.

E) Inspection of incidental related procedures.

Samples of all material including compacted specimens and certified copies of all reports and printouts shall be made available to the Engineer or its agent as often as requested including: asphalt binder; virgin aggregates; modifiers, loose and compacted mixture specimens; and combined aggregate samples.

<u>8.10 Plant-Produced Material</u>. Plant-produced material shall be sampled and tested for VMA, gradation, asphalt binder content, and air voids (Marshall or Superpave at N_{design}), on a lot basis. The Engineer's testing personnel shall be certified by the New England Transportation Technician Certification Program (NETTCP), as WMA/HMA Plant Technicians. Sampling shall be from material deposited into trucks at the plant or from trucks at the job site. A lot will consist of:

- one day's production

Where more than one plant is simultaneously producing material for, the job, the lot sizes shall apply separately for each plant.

<u>8.1.1 - Sampling</u> - Sufficient material for analysis and preparation of test specimens will be sampled by the Engineer on a random basis, in accordance with the procedures contained in ASTM D 3665. A minimum of one set of laboratory compacted specimens will be prepared for each lot in accordance with AASHTO T312, at the number of gyrations required by Table 5 herein (for Superpave only), or in accordance with Marshall design criteria, Table 6. Each set of laboratory compacted specimens will consist of two test portions prepared from the same field sample.

The sample of Asphalt may be put in a covered metal tin and placed in an oven for not more than 30 minutes to maintain the heat. The compaction temperature of the specimens should be as specified in the JMF.

In addition to the Asphalt samples, the Contractor shall take one, one-quart sample of the PG binder used to produce the Asphalt at the start of the work. The PG sample shall be turned over to the Engineer on the first day of project production.

8.1.2 - Testing

A. Bulk Specific Gravity - Sample specimens shall be tested for bulk specific gravity in accordance with AASHTO T166 or T275, whichever is applicable, for use in computing air voids and density. Air voids shall be computed in accordance with AASHTO T269.

B. Gradation and Asphalt Binder Content - The gradation and asphalt binder content of the mixture shall be measured for each lot in accordance with the following:

(1) Asphalt Binder Content - A minimum of three (3) extraction tests shall be performed in accordance with AASHTO T164 or AASHTO T308 for determination of asphalt content. The weight of ash portion of the extraction test, as described in AASHTO T164, shall be determined as part of the first extraction test performed at the beginning of plant production; and as part of every tenth extraction test performed thereafter, for the duration of plant production. The last weight of ash value obtained shall be used in the calculation of the asphalt content for the mixture. If utilizing AASHTO T308 for asphalt content determination, the calibration process and calibration factor, as described in AASHTO T308, shall be determined as stated, prior to acceptance testing. A verification shall be performed as part of every twentieth test performed thereafter or when changes in the mix are apparent.

(2) Gradation - Aggregate gradations shall be determined from mechanical analysis of extracted aggregate in accordance with AASHTO T 30 and AASHTO T27 (Dry Sieve). When asphalt content is determined by the nuclear method, aggregate gradation shall be determined from hot bin samples on batch plants, or from the cold feed on drum mix or continuous mix plants, and tested in accordance with AASHTO T27 (dry sieve) using actual batch weights to determine the combined aggregate gradation of the mixture.

C. The Dust-to-Effective Asphalt ratio shall be determined once for each sublot from the mechanical analysis of extracted aggregate and the asphalt binder content. The Dust-to-Effective Asphalt ratio shall be determined by the Engineer in accordance with AASHTO PP28-02.

D. The Theoretical Maximum Specific Gravity of the mixture shall be measured for each lot in accordance with AASHTO T209, Type C, D, or E container. Samples shall be taken on a random basis in accordance with ASTM D 3665. The value used in the field placed void computations shall be the average of the maximum specific gravity measurements for the street paved.

E. Temperatures. Temperatures shall be checked, at least three times per lot, at necessary locations to determine the temperatures of the dryer, the asphalt binder in the storage tank, the mixture at the plant, and the mixture at the job site.

F. VMA and air voids, for each plant field sample, will be determined by the Engineer in accordance with the applicable AASHTO test method. The VMA, and air voids for each lot shall be computed by averaging the results of the two test specimens representing that lot.

8.1.3 Acceptance of Plant Produced WMA/HMA - Acceptance of plant produced WMA/HMA material will be based upon plant air voids, Marshall stability and flow (if applicable), VMA, gradation, asphalt binder content, and temperature, and shall be determined by the Engineer in accordance with these specifications.

8.2 Field Placed WMA/HMA Material - WMA/HMA material placed in the field shall be tested for both joint and mat density on a completed street or public facility basis. The Engineer may conduct any necessary testing to monitor that the specified density, uniformity and smoothness is being achieved. A properly correlated nuclear or non-nuclear gauge may be used to monitor the pavement density in accordance with ASTM D2950.

8.2.1 Sampling - Density gauges (nuclear or non-nuclear) may be used by the Engineer to determine density of the WMA/HMA mat and/or longitudinal joints in accordance with the calibration and correlation procedures outlined in this specification. Cores of the WMA/HMA material shall be minimized and only taken at the direction of the Engineer and approval of the Town.

Mat and longitudinal joint density tests will be located by the Engineer on a stratified random sampling basis for each street or facility paved within three days of construction. The length of the longitudinal paving joint will be divided into sub-lots for sampling and testing purposes. If more than one longitudinal joint is formed on a street, then the random sample length will be the total lineal feet of longitudinal joint placed. A mat and longitudinal joint test will be taken by the Engineer randomly from each these sub-lot intervals. Sub-lots will be determined on the basis of five (5) sub-lots per one thousand (1,000) tons of material placed or a minimum of three (3) sub-lots from each street or facility paved. Sampling and testing for density will be conducted in the following manner:

Paving courses will tested with the density gauge (for correlation), then sampled by coring the mat and longitudinal joint using a 6 inch diameter wet-core bit specifically designed for cutting pavement. The cores will be tested for density and thickness.

When sampling of the longitudinal joint for density determinations by coring, the core will be taken on the joint, not adjacent to the longitudinal paving joint.

A test for intermediate course density and a test for surface course density will be obtained from each sub-lot segment. The total width of the paved surface (curb to curb) will be determined at the longitudinal sub-lot location to sample and test for mat density. A transverse off-set distance from the centerline of the roadway will be established for mat density sampling and testing. The location, either right or left of centerline, will be based on whether a random number is "odd or even" (odd=left; even=right). When the off-set location is within 2 foot of the pavement edge, curb, catch basin or structure, or 1 foot off a longitudinal joint, or 10 foot off a transverse joint, the sample shall be relocated.

For all nuclear density gauge test locations, two 60-second readings will be taken with the gauge turned 180 degrees for each increment. The average of the two readings will be reported as the density value for each location.

For non-nuclear density gauge test locations, five (5) increments will be used, moving the gauge six inches after each reading in a square pattern, taking one reading in each corner and one in the center. The average if the five readings will be reported as the density value for each location.

The testing of the longitudinal joint for density determinations will be made by placing the density gauge first on one side adjacent to the longitudinal paving joint, then placed on the other side of the longitudinal paving joint, then the results averaged. Each placement of the gauge will result in the averaging of two test increments on each side of the joint with the gauge turned 180 degrees for each increment.

If the results of the average density gauge readings for a street, pavement facility, or paving day are below the threshold for 100% adjustment as indicated in Table 9 or Table 10, pavement cores will be removed as per this specification, and used for determining the actual pavement density.

In the event that a new density gauge must be correlated for this project, cores will be taken from the mat and longitudinal joint representing the test locations. If "re-correlation" is necessary, take four density tests at quarter points around each of five previously cored and tested locations; making sure that the side of the gauge is at the edge of the patched core location and firmly seated. For nuclear density gauges, each test must be the average of two test increments turning the gauge 180 degrees.

For non-nuclear density gauges, five (5) increments will be used, moving the gauge six inches after each reading in a square pattern, taking one reading in each corner and one in the center. The average if the five readings will be reported as the density value for each location.

All core samples shall be neatly cut with a core drill and water cooled bit where the cutting edge of the core drill bit shall be of hardened steel or other suitable material with diamond chips embedded in the metal cutting edge. The minimum diameter of the sample shall be 6 inches. Samples that are clearly defective, as a result of sampling, shall be discarded and another sample taken. The Engineer or the Owner's agent shall furnish all tools, labor, and materials for cutting samples and filling the cored pavement. Cored holes shall be filled by the Engineer and within one day after sampling.

Pavement cores may be used to determine the average percent density and thickness of WMA/HMA courses; nuclear or non-nuclear density gauge readings may be used for density testing of WMA/HMA courses. The average density will be used to determine the percent payment. Resampling of the pavement shall be in accordance with applicable provisions of the NETTCP Quality Assurance Technologist Manual, latest edition.

If the Contractor is concerned about the test results obtained by the Engineer, the Contractor may request that random core samples be obtained and tested to supplement (not replace) the original core data. The coring, patching and testing of the additional samples will be the responsibility of the Contractor. Cores for the mat and/or longitudinal joint density tests will be located by the Engineer and witnessed by the Contractor. Cores locations will be based on a new stratified random sampling plan for each street or facility paved in accordance with the procedures stated above. Upon approval of the coring operation, the Contractor will notify the Engineer 48 hours in advance of the cores being taken such that the Engineer can witness the sampling. The additional cores must be tested by a certified WMA/HMA plant technician in the presence of the Engineer or his designated representative.

Only one (1) set of additional mat and/or longitudinal joint cores will be allowed on a street or lot.

8.2.2 Testing - The bulk specific gravity of each cored sample will be measured by the Engineer in accordance with AASHTO T166 or T275, whichever is applicable. The theoretical maximum specific gravity shall be the average maximum specific gravity for the day's production in accordance with the plant-produced material section. The theoretical value used for the percent density of the core samples shall be the average of the measurements for maximum specific gravity for the day's production. The percent density of each sample will be determined in accordance with AASHTO T269, using the bulk specific gravity of each sample and the average theoretical maximum specific gravity. Retesting of pavement shall be in accordance with applicable provisions of the NETTCP Quality Assurance Technologist Manual, latest edition.

A. Mat Density. Core locations will be determined by the Engineer on a random basis in accordance with procedures contained in ASTM D 3665. Cores shall not be taken closer than 1 foot from a longitudinal joint and 10 feet from a transverse joint.

B. Joint Density. Three (3) six inch diameter cores of finished longitudinal joint will be taken by the Engineer or the Engineer's representative from each street, public facility, or paving day. Core locations will be determined by the Engineer on a random basis over the joint, not adjacent to the joint.

8.2.3 Adjustment Pay Schedule for Mat Density - The pay factor based on the density adjustment schedule will be applied to the bid price per ton after any monthly price adjustments for liquid asphalt and fuel for compacted mixtures greater than or equal to 1-1/2 inches thickness as shown in the contract award.

Table 9.
ASPHALT MAT DENSITY
Adjustment Schedule

Average Percent of Maximum Density (minimum 3 samples)	Percent Payment
100.0 - 98.1	98
98.0 - 95.0	102
94.9 - 92.0	100
91.9 – 89.0	90
88.9 – 87.0	75
86.9 or less	50% or rejection

8.2.4 Adjustment Pay Schedule for Longitudinal Joint Density - The pay factor based on the joint density adjustment schedule will be applied to the bid price per ton after any monthly price adjustments for liquid asphalt and fuel for compacted mixtures greater than or equal to 1 1/2 inches thickness as shown in the contract award.

Table 10.
ASPHALT LONGITUDINAL-JOINT DENSITY
Adjustment Schedule

Average Percent of Maximum Density (minimum 3 samples)	Percent Payment
100.0 - 98.1	98
98.0 - 95.0	102
94.9 - 90.0	100
89.9 - 89.0	90
88.9 - 88.0	80
87.9 - 87.0	70
86.9 or less	50% or rejection

The total Asphalt adjustment will be based on the weighted sum as follows:

.60 Mat Adjustment + .40 LJ Adjustment = Total WMA/HMA Adjustment

When the construction of the pavement does not include the construction of a longitudinal joint, the payment adjustment will be based on Table 9 only, no weighted sum will be calculated.

Price adjustments to the contract bid price related to monthly price adjustments for liquid asphalt, diesel fuel and gasoline will be performed first, followed by WMA/HMA adjustments related to mat and joint density.

8.2.5 - Rejection of Inferior WMA/HMA The Engineer may at any time, not withstanding previous plant acceptance, reject and require the Contractor to dispose of any batch of Asphalt which is rendered unfit for use due to contamination, segregation, incomplete coating of aggregate, or improper mix temperature. Such rejection may be based on only visual inspection or temperature measurements. Similarly, the Engineer may at any time, not withstanding field acceptance for mat density, reject and require the Contractor to correct any WMA/HMA pavement that was placed with unacceptable mat uniformity or paving joints due to low density, segregation, improper elevation, or tearing. In the event of such rejection, the Contractor and Engineer may take random split samples of the area(s) in question in the presence of the Engineer, and if it can demonstrate in the laboratory, in the presence of the Engineer, that such material/pavement was erroneously rejected, payment will be made for the material at the contract unit price.

8.3 Rounding - Numbers used in all calculations shall be carried to the correct significant figures and rounded as follows:

A. When the first digit after those you want to drop is 4 or less, that digit and all others to the right are dropped. Ex. 62.9437 to 3 significant digits = 62.9
B. When the first digit after those you want to retain is 5 or greater, that and all others to the right are dropped and the last digit retained is increased by one. Ex. 1.955234 to 3 significant digits = 1.96.
C. All Intermediate calculations should not be rounded and shall be reported to two more significant figures than the least number of significant figures in the data values.
D. Test Standards and technical look-up tables serve as first priority over these rounding rules.

8.4 Outliers - Due to the extremely low probability of an outlier occurring in a small number of samples representing the Lot, no outliers will be considered. If a result is suspect, it would be prudent to take the time to investigate the sampling, testing, equipment calibration, production and construction operation to identify the cause of the suspect reading.

9.0 Measurement

9.1 Method of Measurement - The quantity of Asphalt to be paid for shall be the measured by the ton complete in place. The quantity of each truck load shall be obtained from printed tickets indicating the recorded batch weights or certified truck scale weights that have been properly countersigned by an authorized representative of the Engineer at the time of delivery. WMA/HMA quantities shall be verified by the Engineer using WMA/HMA yield calculations which will include the in-place bulk specific gravity and actual area and nominal depth for the mixture placed.

10.0 PAYMENT

10.1 Basis of Payment - Payment shall be made at the contract unit prices per ton complete in place with any applicable adjustments. This payment shall be full compensation for furnishing and placing all quality Asphalt materials, including installation of paver placed berm, cutting of keyways or milling/stripping of pavement to produce neat joints, mechanical sweeping of streets and for all labor, tools, equipment, materials, and all incidentals necessary to complete the work.

10.2 Adjustment for Density - Adjustment for mat and joint density shall be made when the WMA/HMA material varies from the specification target limits, but is within the tolerances stated in Sections 8.2.3 and 8.2.4 "Adjustment Pay Schedule for Density", respectively; the material will be allowed to remain in place with the specified adjustment in payment with the exception of mixtures placed with mat density below 86.9 percent of maximum. Adjustment for density will be made after any necessary adjustments relating to liquid asphalt, diesel fuel, and gasoline.

PAY ITEM	**DESCRIPTION**	**PAY UNIT**
460.01	Asphalt Pavement – Marshall Mixes	TON
	Base Course	
	Dense Binder Course (Marshall)	
	Modified Arterial Top(Marshall)	
	Top Course (Marshall)	
	Dense Mix (Marshall)	
	Ultra-Thin Surface (Marshall)	
460.02	Asphalt Pavement – Superpave Mixes	TON
	Superpave 9.5mm	
	Superpave 12.5mm	
	Superpave 19mm	
	Superpave 37.5mm	
	Superpave 4.75mm	
464.	Bitumen for Tack Coat	GAL
464.5	Hot Poured Rubberized Asphalt Sealer	LF

ITEM 470.2 ASPHALT BERM LINEAR FOOT
TYPE A - MODIFIED

Work under this item shall conform to the relevant provisions Sections 470 of the Massachusetts Highway Department 1988 Standard Specifications for Highways & Bridges, the latest supplements and addendum thereto, and the following:

The above item shall be constructed by means of an approved extrusion machine and placed on top of a "spill berm" in accordance to the Dedham DPW Design & Construction Standards (see Attachment A). Locations shall be determined in the field by the Town prior to construction.

Prior to construction of the Asphalt berm a tack coat of bitumen shall be placed on the binder surface for the entire length and width of the Asphalt berm.

Asphalt Berm, Type A – Modified will be measured for payment by the linear foot, complete in place, along the gutter line when placed with an approved extrusion machine.

Asphalt Berm, Type A – Modified placed by an Asphalt paving machine as part of the installation HMA Roadway pavement shall not be paid under this item, but shall be considered incidental to the appropriate Asphalt Roadway Pavement pay item.

Payment

Payment for work under this item shall be made at the Contract unit bid price per linear foot complete in place and shall include full compensation for furnishing all labor, materials and equipment, and any other incidental items necessary for the satisfactory completion of this work as specified.

ITEM 472. ASPHALT FOR MISCELLANEOUS WORK TON

Work under this item shall conform to the relevant provisions of Sections 420, 460, 470, 472, and 701 of the Massachusetts Highway Department 1988 Standard Specifications for Highways & Bridges, the latest supplements and addendum thereto, and the following:

Asphalt for miscellaneous work shall be used to provide temporary access and egress to those properties abutting the work area as determined by the Town. It shall also be used for areas, which require Asphalt for patching for temporary transition areas when and where the Town specifies such areas. It shall also be used for permanent patching between new concrete sidewalk and Asphalt pavement or bituminous concrete aprons were no concrete sidewalks are proposed.

The Contractor is advised that this material shall be spread primarily by hand methods. Asphalt for miscellaneous work shall be placed only upon the direction of the Town.

All excavations encountered during the preparation to the use of Asphalt under this item shall be included in the bid price per ton.

Payment

Payment for work under this item shall be made at the Contract unit bid price per ton and shall include full compensation for furnishing all labor, materials and equipment, excavations to the depth required to complete work, tacking, joint sealing, and any other incidental items necessary for the satisfactory completion of this work as specified.

ITEM 482.3 SAWING ASPHALT PAVEMENT LINEAR FOOT

Work under this item shall conform to the relevant provisions Section 120 of the Massachusetts Highway Department 1988 Standard Specifications for Highways & Bridges, the latest supplements and addendum thereto, and the following:

All edges of excavations made in existing pavements and sidewalks shall be squared by saw cutting with power driven tools to provide a neat, clean edge for joining new pavement or sidewalks.

In areas where an existing sidewalk abuts a building, wall or storefront and is to be reconstructed, the existing sidewalk shall be saw cut a minimum of six (6) inches from the building wall or storefront unless otherwise directed by the Town.

Saw cut surfaces in roadway areas shall be treated as specified in accordance with Subsection 460.65 of the Standard Specifications, as amended, or as directed by the Town.

Saw cutting required for the installation of traffic signal conduit shall be included as part of the respective conduit item and shall not be included for payment under this item.

Payment

Payment for work under this item shall be made at the Contract unit bid price per linear foot and shall include full compensation for furnishing all labor, materials and equipment, and any other incidental items necessary for the satisfactory completion of this work as specified.

ITEM 482.34 SAWING CEMENT CONCRETE LINEAR FOOT

Work under this item shall conform to the relevant provisions of Sections 120 of the Massachusetts Highway Department 1988 Standard Specifications for Highways & Bridges, the latest supplements and addendum thereto, and the following:

All edges of excavations made in cement concrete shall be squared by saw cutting with power driven tools to provide a neat, clean edge for joining cement concrete. The Town prior to commencing work shall approve the sawcut equipment.

In areas where an existing sidewalk abuts a building, wall or storefront and is to be reconstructed, the existing sidewalk shall be saw cut a minimum of six (6) inches from the building wall or storefront unless otherwise directed by the Town.

Payment

Payment for work under this item shall be made at the Contract unit bid price per linear foot and shall include full compensation for furnishing all labor, materials and equipment, and any other incidental items necessary for the satisfactory completion of this work

ITEM 504.	**GRANITE CURB TYPE VA4-STRAIGHT**	**LINEAR FOOT**
ITEM 504.1	**GRANITE CURB TYPE VA4-CURVED**	**LINEAR FOOT**
ITEM 506.	**GRANITE CURB TYPE VB-STRAIGHT**	**LINEAR FOOT**
ITEM 506.1	**GRANITE CURB TYPE VB-CURVED**	**LINEAR FOOT**
ITEM 509.	**GRANITE TRANS. CURB FOR WCR STRAIGHT**	**LINEAR FOOT**
ITEM 509.1	**GRANITE TRANS. CURB FOR WCR - CURVED**	**LINEAR FOOT**
ITEM 514.	**GRANITE CURB INLET – STRAIGHT**	**EACH**
ITEM 515.	**GRANITE CURB INLET - CURVED**	**EACH**
ITEM 580.	**CURB REMOVED AND RESET**	**LINEAR FOOT**
ITEM 581.	**CURB INLET REMOVED & RESET**	**EACH**
ITEM 590.	**CURB REMOVED & STACKED**	**LINEAR FOOT**

Work under these items shall conform to the relevant provisions of Section 500 of the Massachusetts Highway Department 1988 Standard Specifications for Highways & Bridges, the latest supplements and addendum thereto, and the following:

It is intended that all existing curbing removed during construction be reset as directed by the Town. All straight curbing not reused, and all curved curbing of a different radius than proposed, shall be transported and neatly stacked at locations as specified by the Director of Public Works.

Any curbing deemed to be unsuitable by the Town for reuse shall become the property of the Contractor, and shall be disposed of as indicated earlier in these Specifications under "Disposal of Surplus Excavated Material". All excavations, disposals and backfill materials shall be included in the unit price under these items. Work will also include stacking, temporary storage, and relocation of all curbing to be reused on this project, and a minimum width of six (6) inches high-early-strength cement concrete shall be placed adjacent to all curb items listed above, and in accordance to the Dedham DPW Design & Construction Standards (see Attachment A).

Payment

Payment for work under these items shall be made at the Contract unit bid price per linear foot or per each as indicated above, and shall include full compensation for furnishing all labor, materials, and equipment, excavation, disposal, curb and its installation, high-early-strength cement concrete as shown on the curb detail, gravel borrow Type "B" for backfill, and any other incidental items necessary for the satisfactory completion of this work as specified.

ITEM 509.2 SLOPED TO VERTICAL GRANITE TRANSITION PIECE EACH

Work under this item shall conform to the relevant provisions of Section 501 of the Massachusetts Highway Department 1988 Standard Specifications for Highways & Bridges, the latest supplements and addendum thereto, and the following:

It is intended that this item be used where a transition from sloped granite edging to vertical granite curb is required. Transition pieces shall be in accordance to the Dedham DPW Design & Construction Standards (see Attachment A).

Payment

Payment for work under this item shall be made at the Contract unit bid price per each and shall include full compensation for furnishing all labor, materials and equipment, and any other incidental items necessary for the satisfactory completion of this work as specified.

ITEM 520.11 SPECIAL CONCRETE CURB CAST IN PLACE WITH SIDEWALK LINEAR FOOT

Work under this item shall conform to the relevant provisions of Section 500 of the Massachusetts Highway Department 1988 Standard Specifications for Highways & Bridges, the latest supplements and addendum thereto, and the following:

Curb shall be cast in place as part of the sidewalk during the sidewalk installation. The curb shall be 6" in width and 10" in depth as shown on the Dedham DPW Design and Construction Standards (see Attachment A). This item shall be used as directed by the Town where granite curb is substituted by concrete curb.

Payment

Payment for work under this item shall be made at the Contract unit bid price per linear foot and shall include full compensation for furnishing all labor, materials and equipment, excavation, disposal, gravel borrow Type "B" for backfill, and any other incidental items necessary for the satisfactory completion of this work as specified and shown on the detail.

ITEM 570.3 ASPHALT CURB TYPE 3 LINEAR FOOT

Work under these items shall conform to the relevant provisions of Section 501 of the Massachusetts Highway Department 1988 Standard Specifications for Highways & Bridges, the latest supplements and addendum thereto, and the following:

The above item shall be constructed in accordance to the Dedham DPW Design & Construction Standards (see Attachment A). Locations shall be determined in the field by the Town prior to construction.

Prior to construction of the Asphalt berm apply tack coat of RS-1 emulsion to surface of existing pavement prior to the placement of the new Asphalt curb.

Payment

Payment for work under this item shall be made at the Contract unit bid price per linear foot complete in place and shall include full compensation for furnishing all labor, materials and equipment, and any other incidental items necessary for the satisfactory completion of this work as specified.

ITEM 701.	**CEMENT CONCRETE SIDEWALK**	**SQUARE YARD**
ITEM 701.1	**CEMENT CONCRETE SIDEWALK AT DRIVEWAYS**	**SQUARE YARD**
ITEM 701.2	**CEMENT CONCRETE WHEELCHAIR RAMP**	**SQUARE YARD**

Work under these items shall conform to the relevant provisions of Section 701 of the Massachusetts Highway Department 1988 Standard Specifications for Highways & Bridges, the latest supplements and addendum thereto, and the following:

All sidewalks except those at driveways and wheelchair ramps shall be constructed as follows and in accordance to the Dedham DPW Design & Construction Standards (see Attachment A):

Surface: 4” Cement Concrete (4000 PSI, ¾”, 610)
Subbase: 8” Gravel Borrow (Type “B”)

Sidewalks at driveways and wheelchair ramps shall be constructed as follows and in accordance to the Dedham DPW Design & Construction Standards (see Attachment A):

Surface: 6” Cement Concrete (4000 PSI, ¾”, 610)
Subbase: 8” Gravel Borrow (Type “B”)

All wheelchair ramps shall be constructed in accordance with the MHD’s Revised Wheelchair Ramp Standards, dated 2001, the latest supplements and addendum thereto.

Sidewalk excavation shall be included in the bid price per square yard. No separate payment will be made under this item.

Encountered various utility service gate boxes that require adjustment, and miscellaneous signs and parking meter posts that require removal and resetting shall be included in the bid price. No separate payment will be made under this item.

If parking meter posts are deemed to be not reusable by the Town, the Dedham Police Department will supply new posts at no cost to the Contractor.

If deemed necessary by the Town to excavate below 8" from top of sidewalk, the extra excavation will be paid for separately under Item 120.1 Unclassified Excavation.

When materials directly under the sidewalk is found to be acceptable by the Town this material can be approved to remain in place.

Payment

Payment for work under these items shall be made at the Contract unit bid price per square yard and shall include full compensation furnishing all labor, materials and equipment, sidewalk excavation, preparation of sub-base, gravel borrow Type "B" if required, fine grading and compaction, forming, furnishing and placing of 4000 PSI cement concrete, expansion joint, and any other incidental items necessary for the satisfactory completion of this work as specified.

ITEM 702.	**ASPHALT WALK SURFACE**	**TON**
ITEM 703.	**ASPHALT DRIVEWAY**	**TON**

Work under these items shall conform to the relevant provisions of Section 701 of the Massachusetts Highway Department 1988 Standard Specifications for Highways & Bridges, the latest supplements and addendum thereto, and the following:

Sidewalk excavation shall be included in the bid price. No separate payment will be made under this item.

Encountered various utility service gate boxes that require adjustment, and miscellaneous signs & parking meter post that require removal and resetting shall be included in the bid price. No separate payment will be made under this item.

Asphalt installation shall be as follow or as otherwise directed:

Sidewalk
1 ¼" Top Course over
1 ¼" Binder Course Material

Driveway
2” Top Course over
1 ½” Binder Course Material

Payment

Payment for work under these items shall be made at the Contract unit bid price per ton and shall include full compensation for furnishing all labor, materials and equipment, sidewalk excavation, preparation of sub-base, gravel borrow Type “B” if required, fine grading and compaction, forming, furnishing and placing of Asphalt, and any other incidental items necessary for the satisfactory completion of this work as specified.